Electrical stations (substations)

By purpose

- transformer stations
- switching stations
- converter stations
- compensation stations

By position in ES

- power plants
- transmission system – switching, transformer
- consumption – industry, distribution
- converters – transmission, consumption

Rated voltages

• LV:	110	230	400	500	660 V
• MV:	3	6	10	22	35 kV
• HV:	110	220	400	750 kV	

Basic elements of substation equipment

1) Busbars – conductors carrying power to individual branches
2) Branches – equipment for carrying power to grid lines

Instrument equipment in branches

- switch (circuit breaker – CB)
- busbar disconnector
- outlet disconnector
- voltage and current transformers (VT, CT)
- measurement equipment, protections

Rated busbar currents

4	5	6,3	8	10	12,5	16	20	25	32
40	50	63	80	100	125	160	200		
400		630	800	1000	1250	1600	2000	2500	3150
4000	5000	6300	8000	10000	12500	16000	20000	A	

Recommended set of short-circuit endurance (ČSN 38 1754, ČSN 33 3015)

Rated switching-off current I_{nvyp} (kA) – RMS value, its heat impacts must be survived by an electrical equipment for a given time (t = 2 s) without any damaging influencing its operation capability

6,3 8 12,5 16 20 25 31,5 40 50 63

Rated dynamic current I_{dyn} (kA) – peak short-circuit current, its dynamic impacts must be survived by an electrical equipment without any damaging influencing its operation capability

16 20 31,5 40 50 63 80 100 125 160

$$I_{dyn} = 1{,}8 \cdot \sqrt{2} \cdot I_{nvyp}$$

BUSBAR CONFIGURATIONS

a) horizontal plane

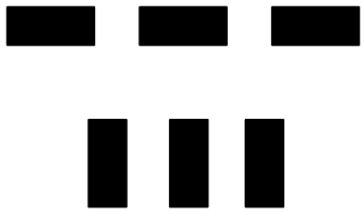

c) inclined plane

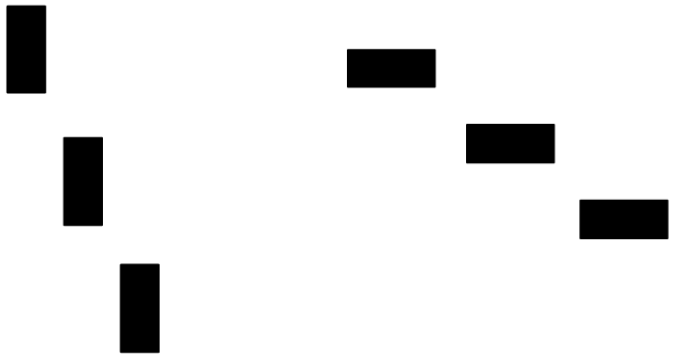

b) vertical plane

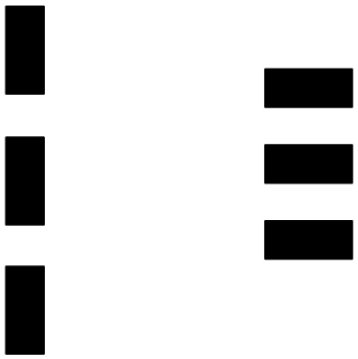

d) triangle

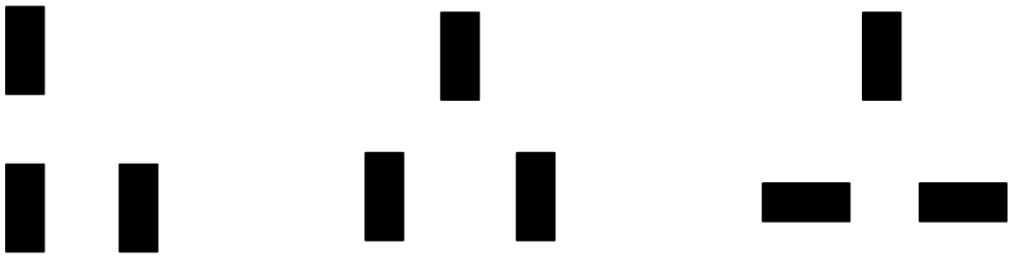

SIMPLE BUSBAR SYSTEM

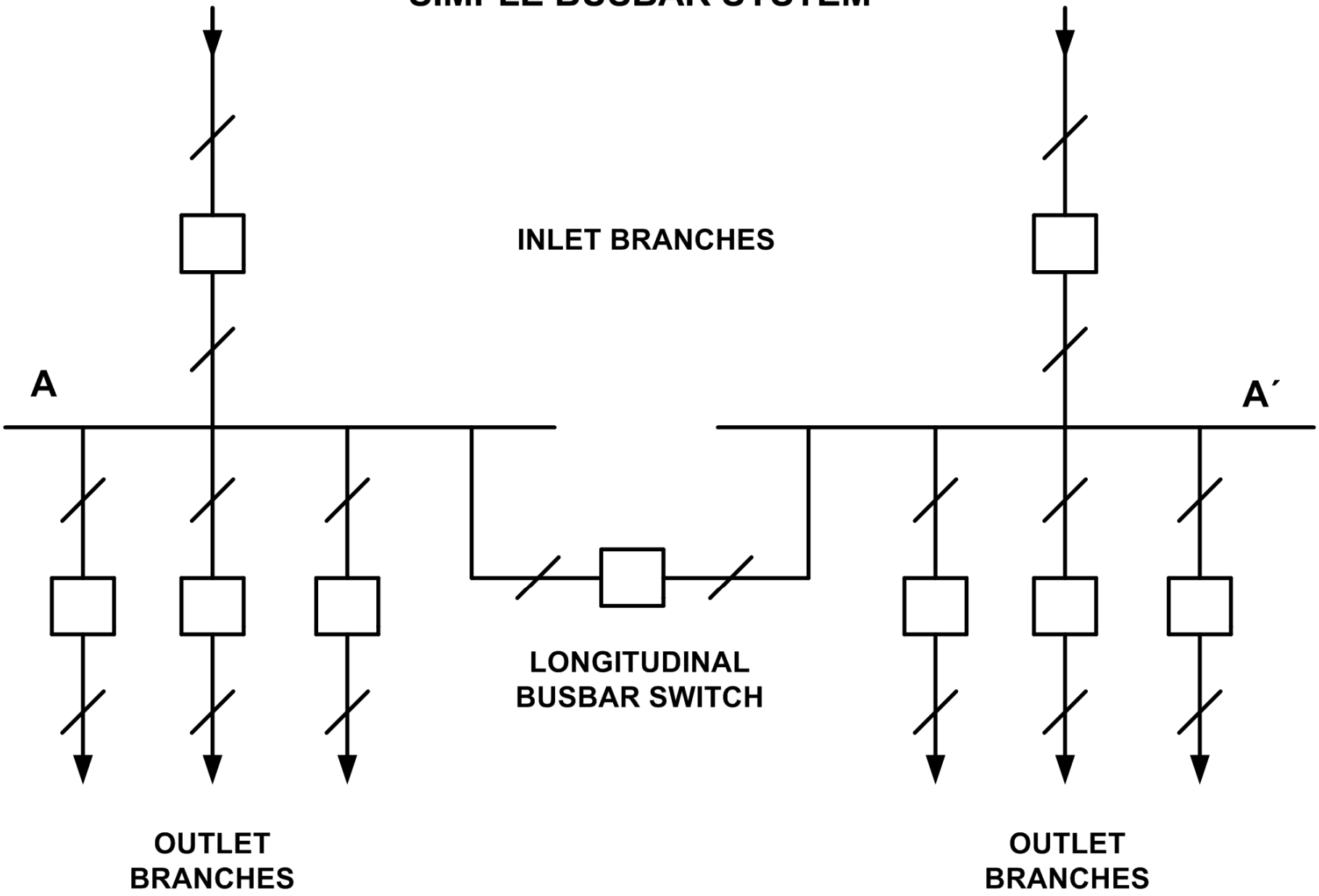

DOUBLE BUSBAR SYSTEM

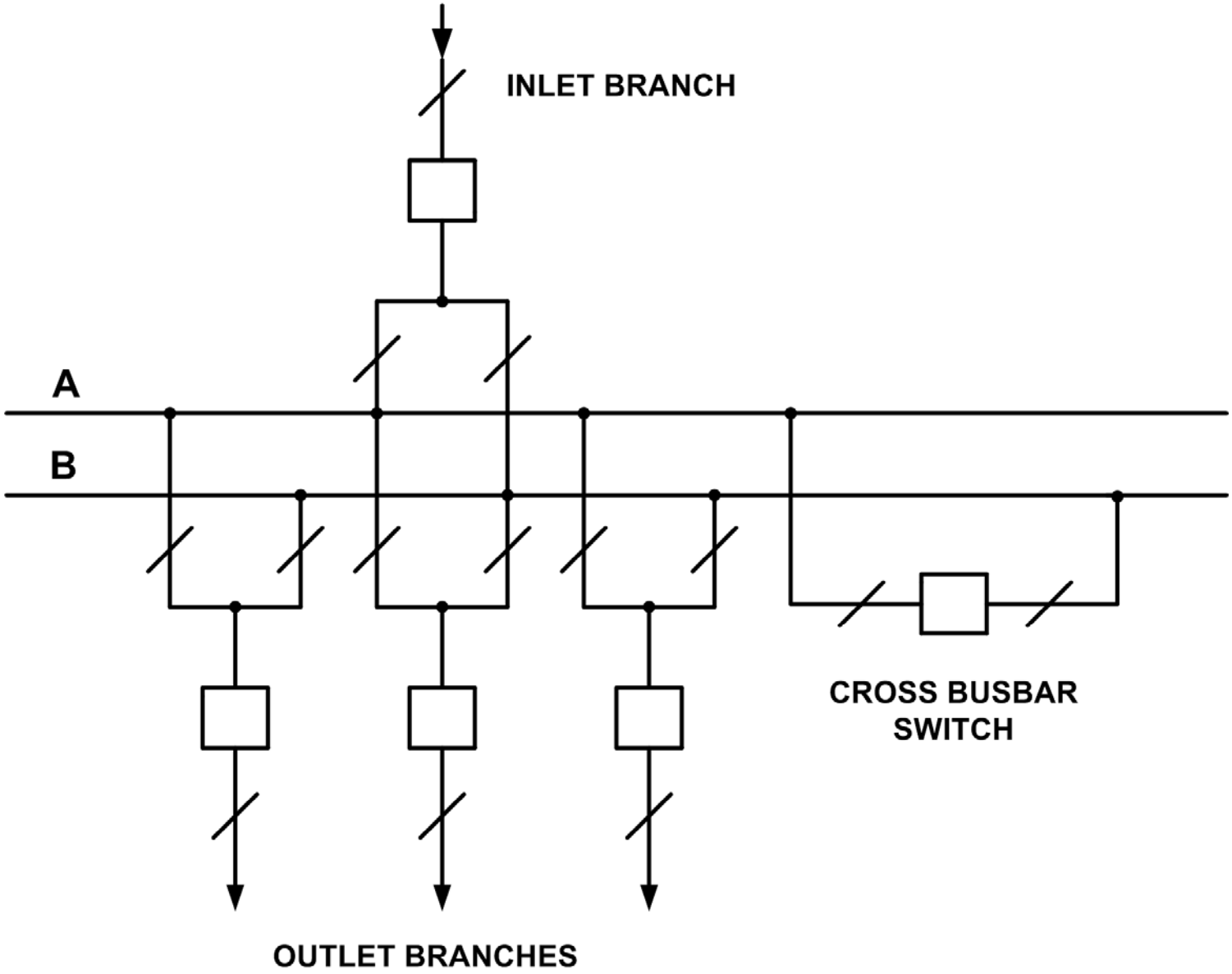

DOUBLE LONGITUDINAL DIVIDED BUSBAR SYSTEM

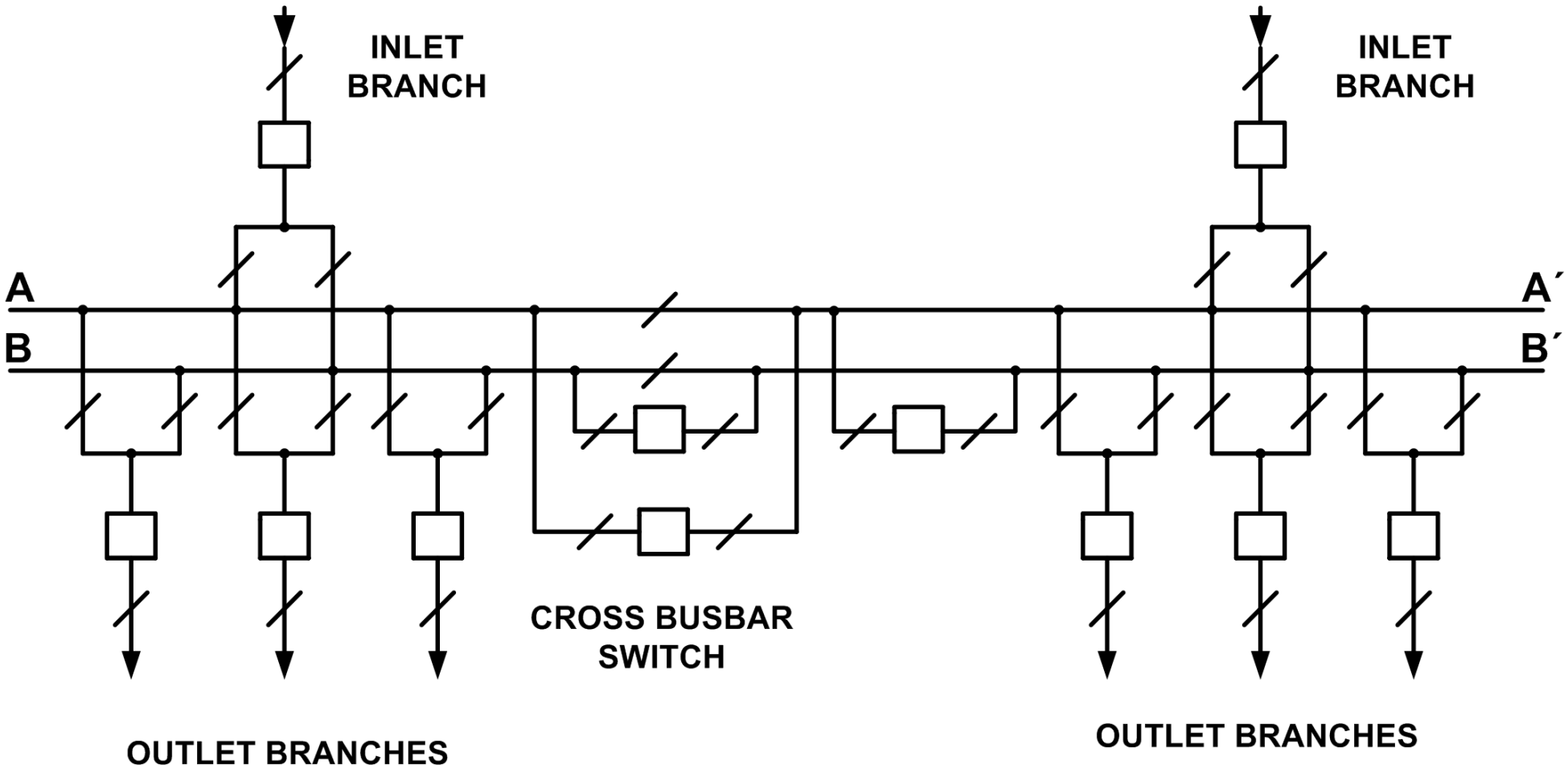

TRIPLE BUSBAR SYSTEM

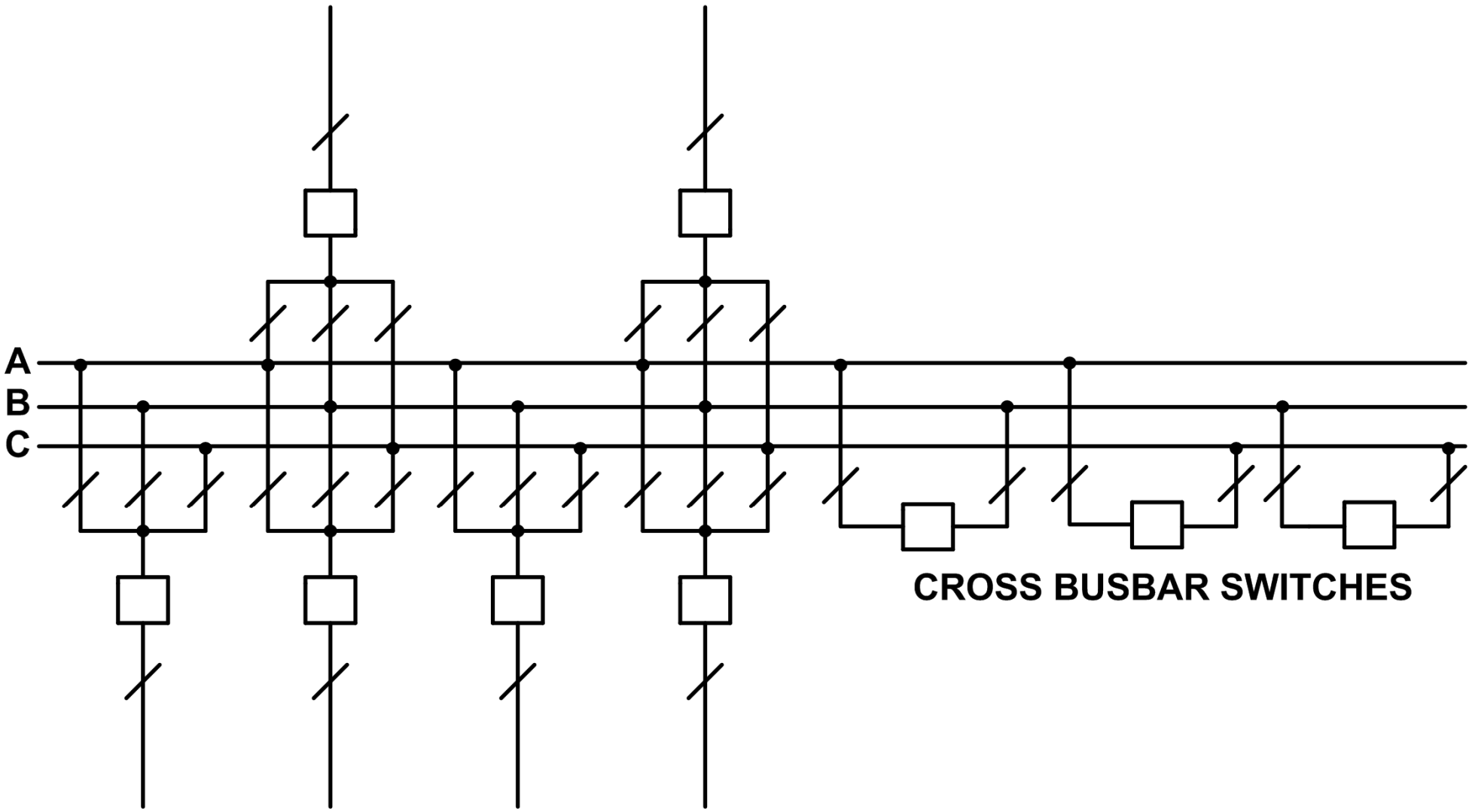

Multiple busbar system and their dividing for higher reliability and flexibility.
Double system on MV level less often, in CR yes.

Combined switches – saving in switches number

COMBINED BUSBAR SWITCH

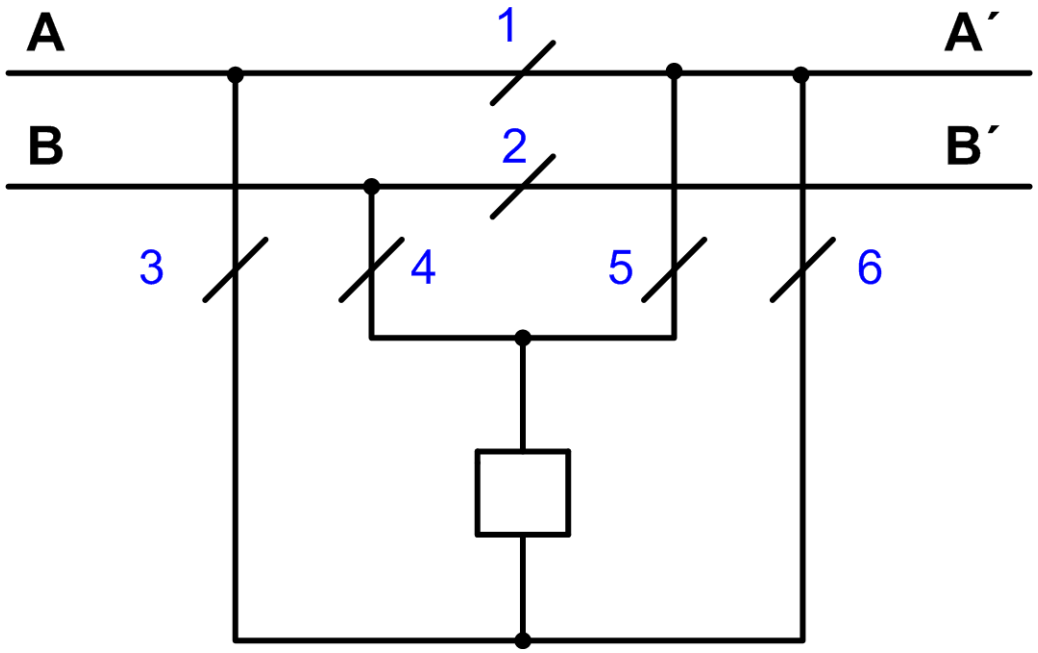

ECONOMICAL CROSS SWITCHING

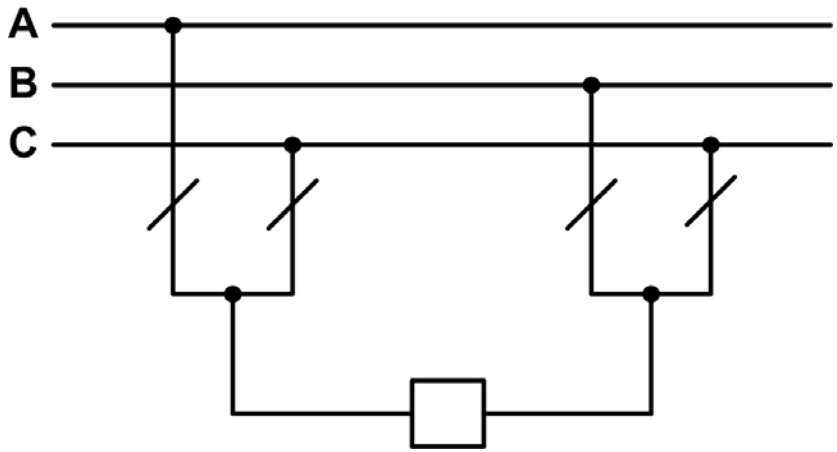

TRIPLE BUSBARS COMBINED SWITCH

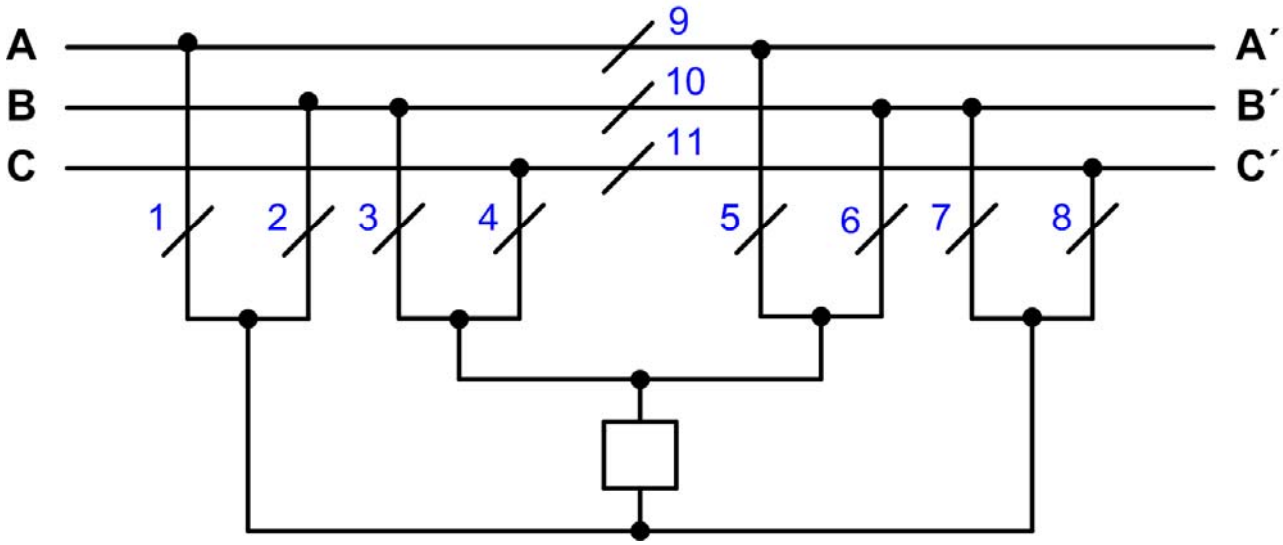

Auxiliary busbar
- possibility to operate a branch also during its CB failure (inspection)

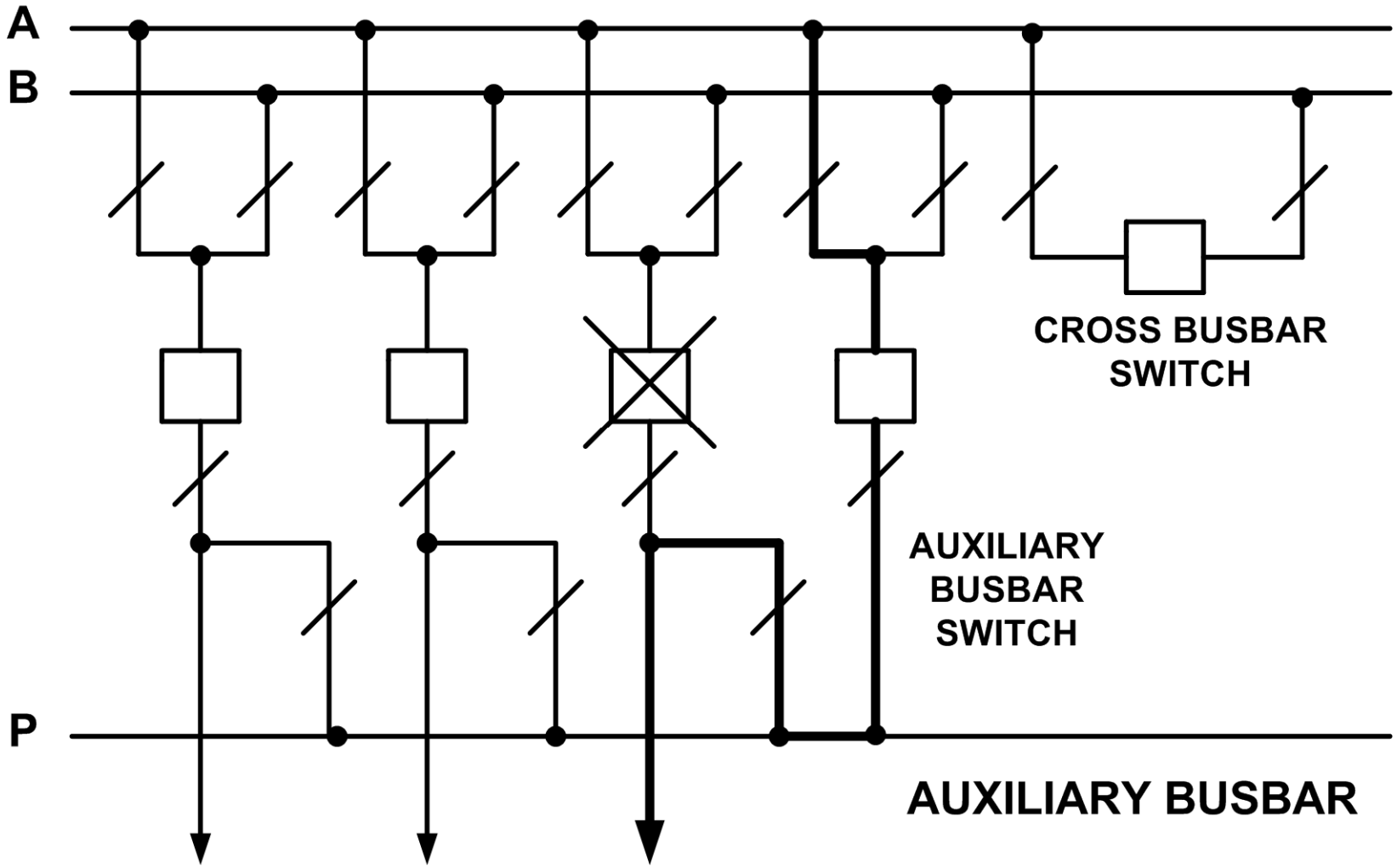

AUXILIARY BUSBAR COMBINED SWITCH

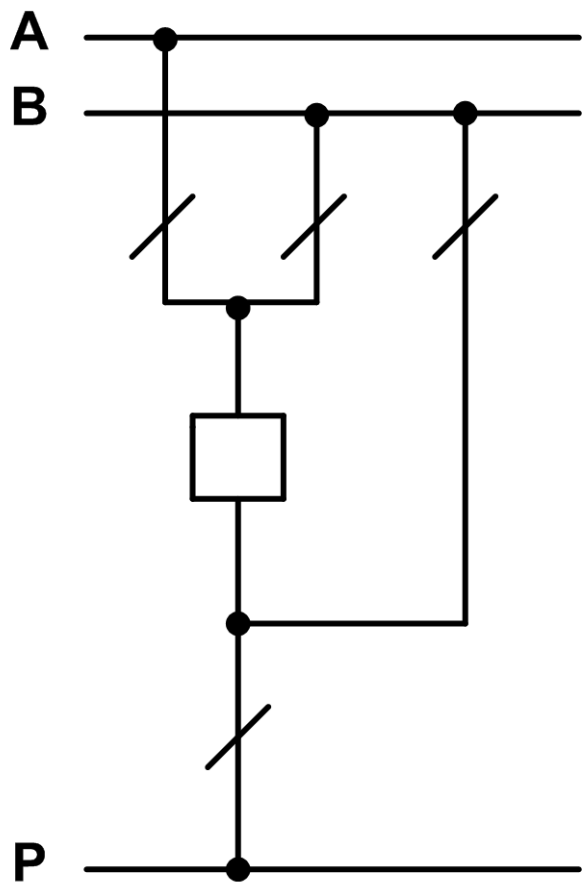

MAIN BUSBAR AS AN AUXILIARY BUSBAR (+ BY-PASS)

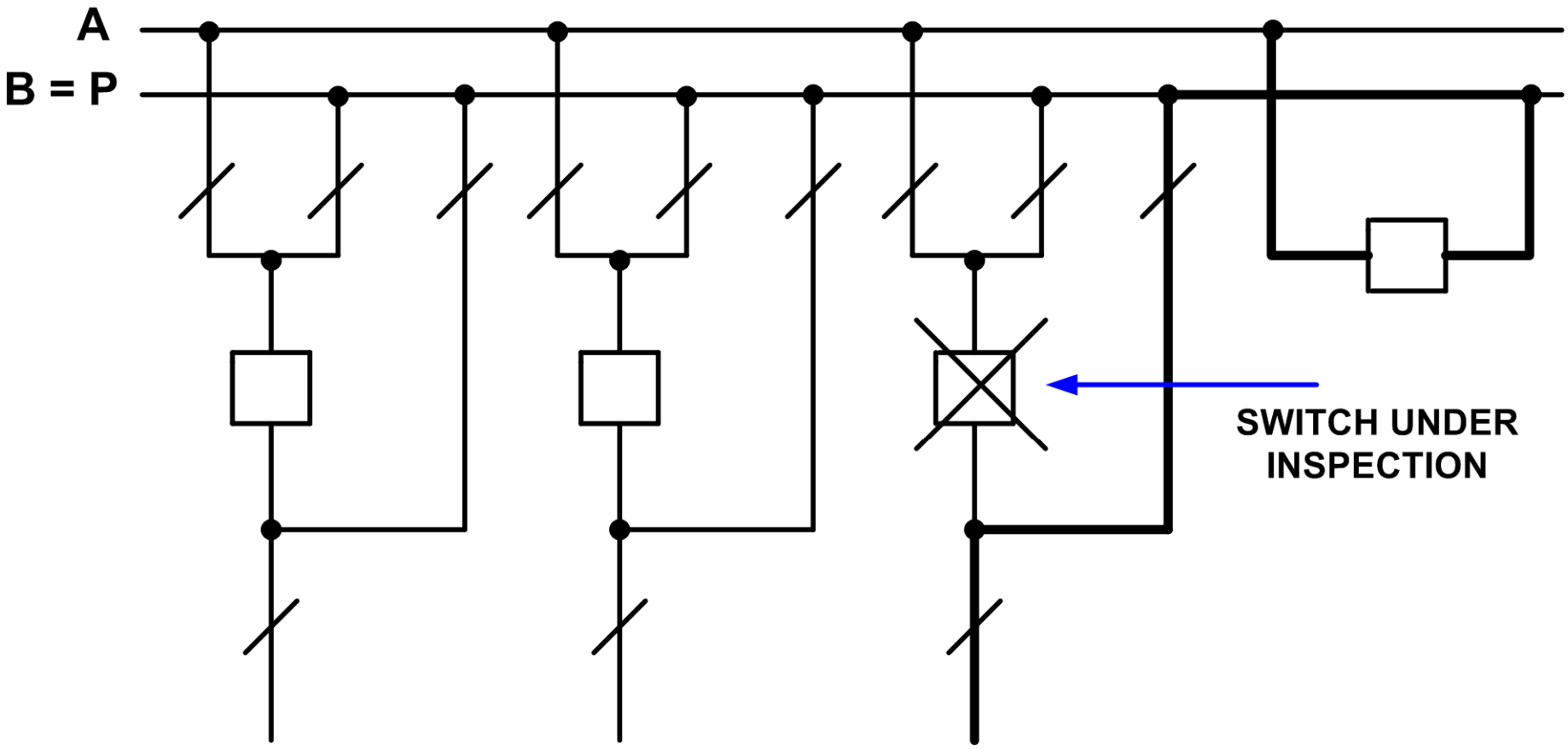

NO BUSBAR CONFIGURATION - RING

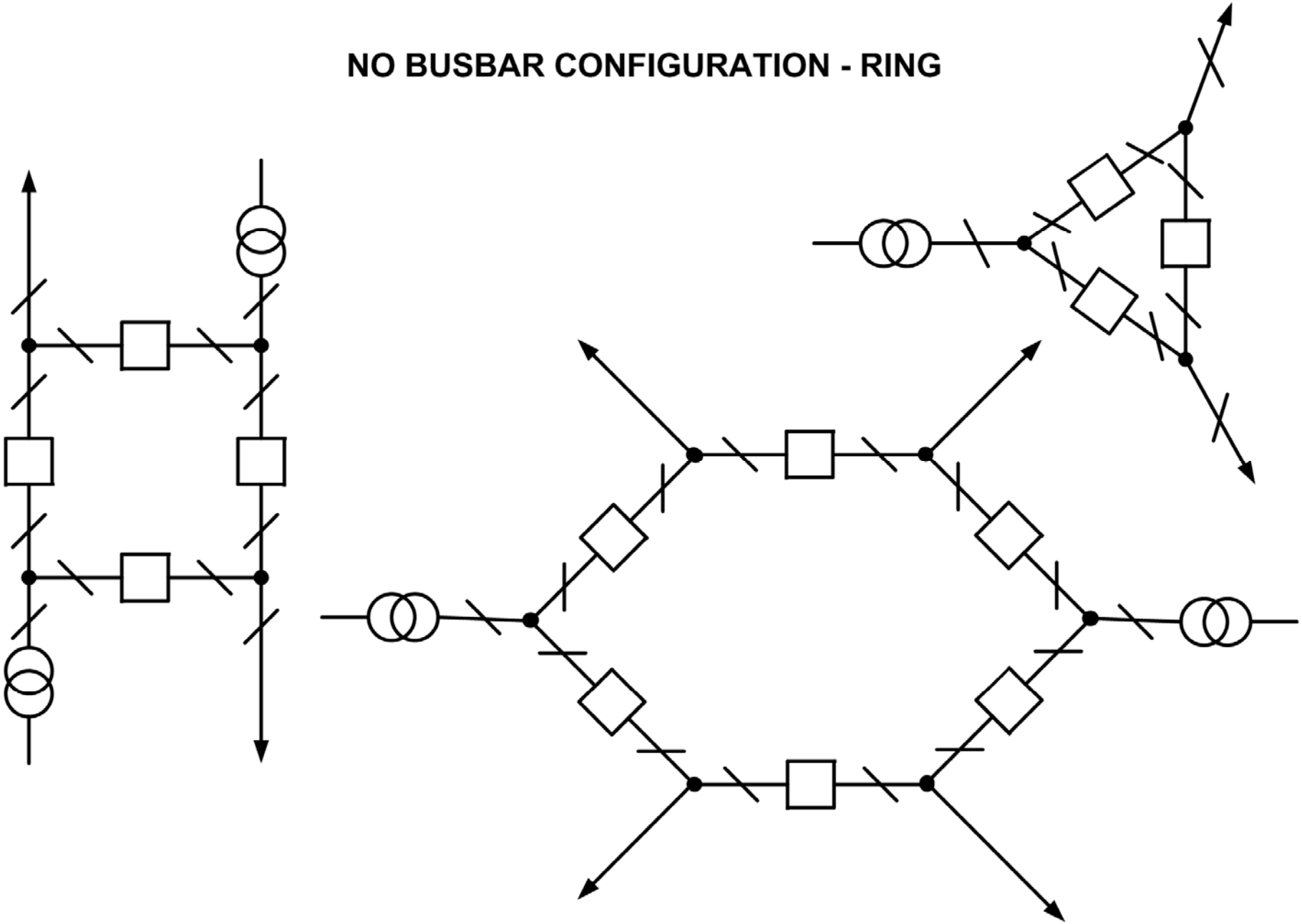

NO BUSBAR CONFIGURATION – „H“

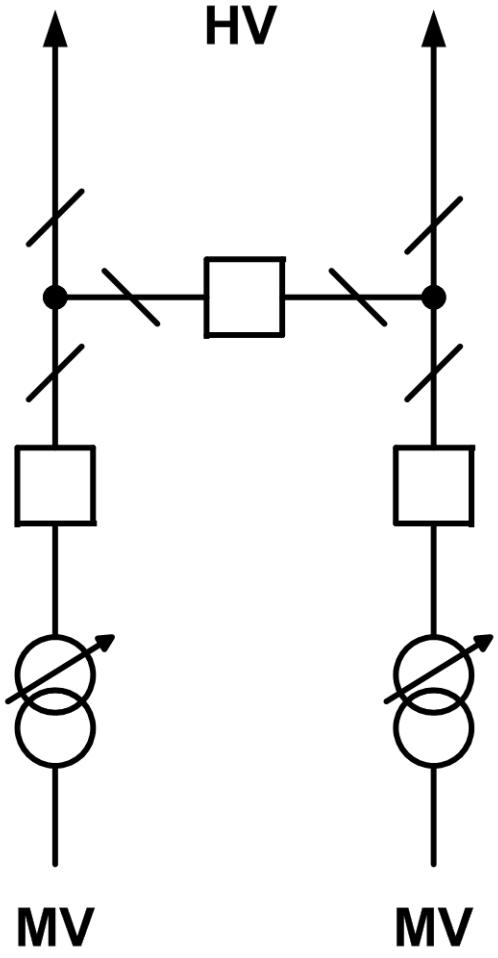

MORE SWITHCES FOR 1 BRANCH
(higher reliability x costs)

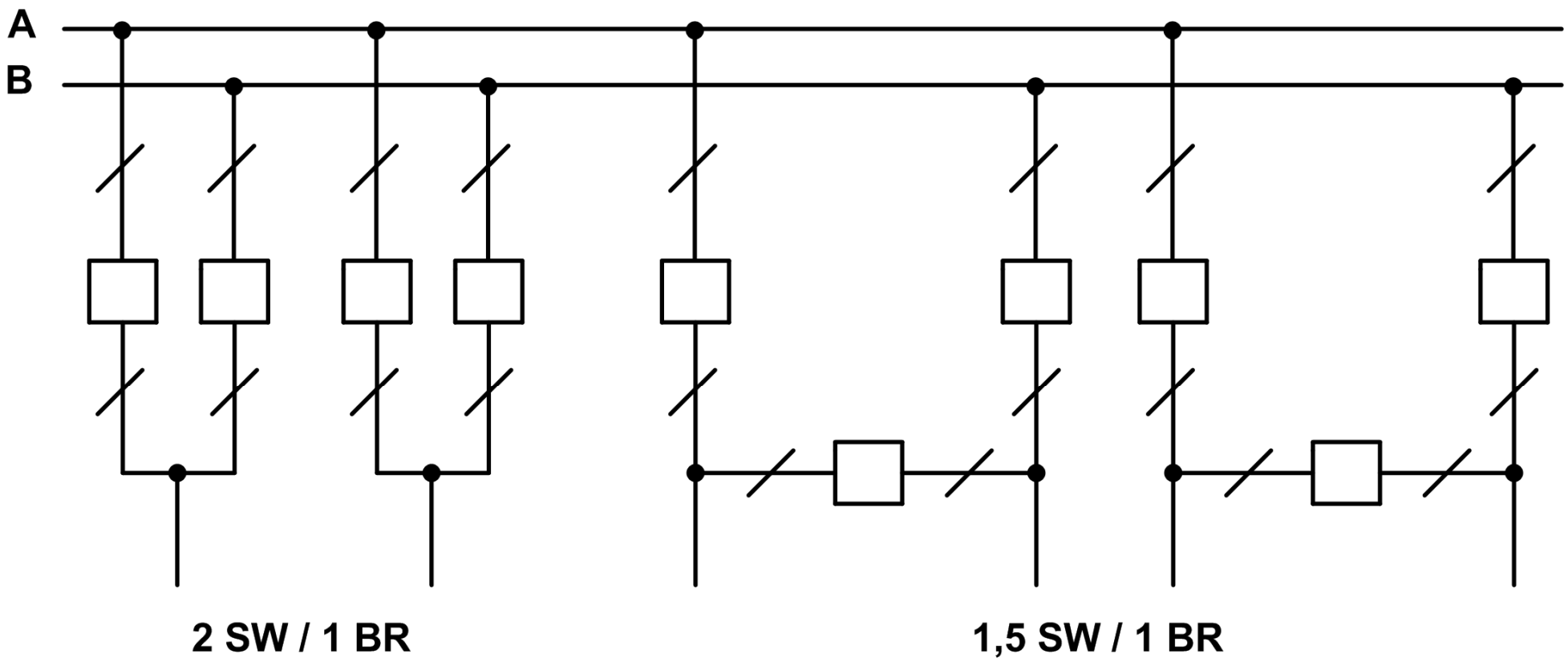

INLET BRANCHES LV

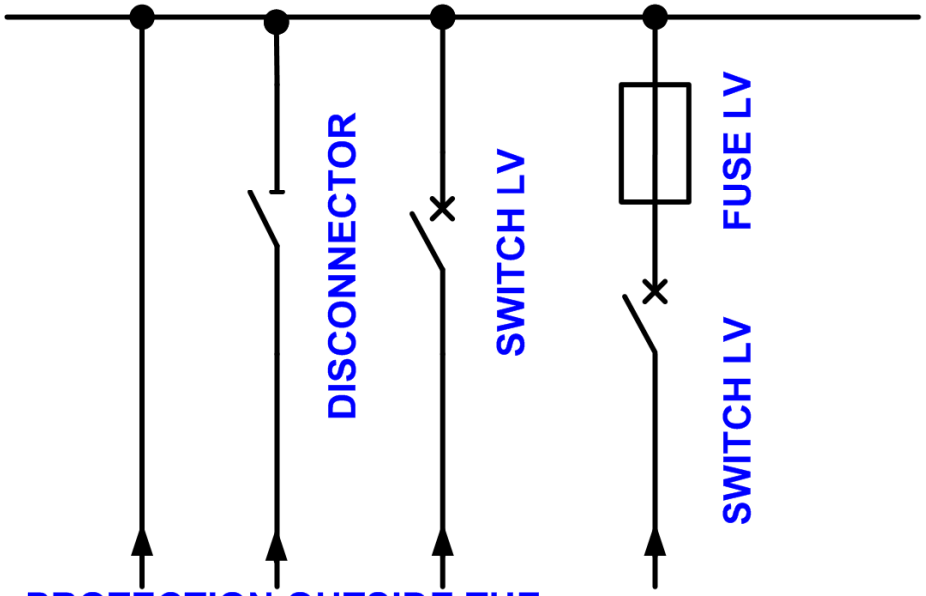

PROTECTION OUTSIDE THE SWITCHGEAR (INLET BEGINNING)

PROTECTION ONLY AGAINST SHORT-CIRCUIT

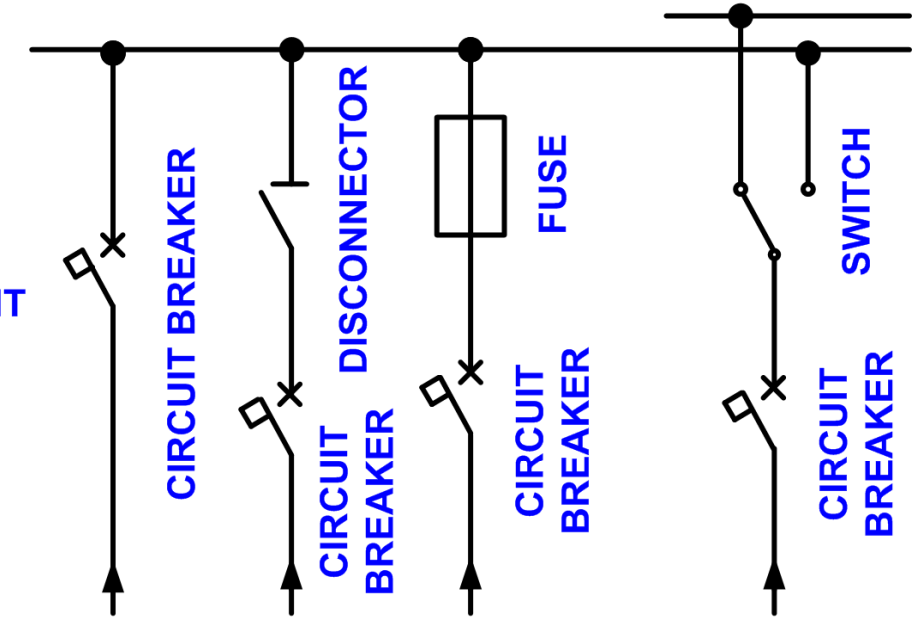

FUSE AGAINST SHORT-CIRCUIT
CIRCUIT BREAKER AGAINST OVERLOADING
(SMALL S.-C. POWER)

OUTLET BRANCHES LV

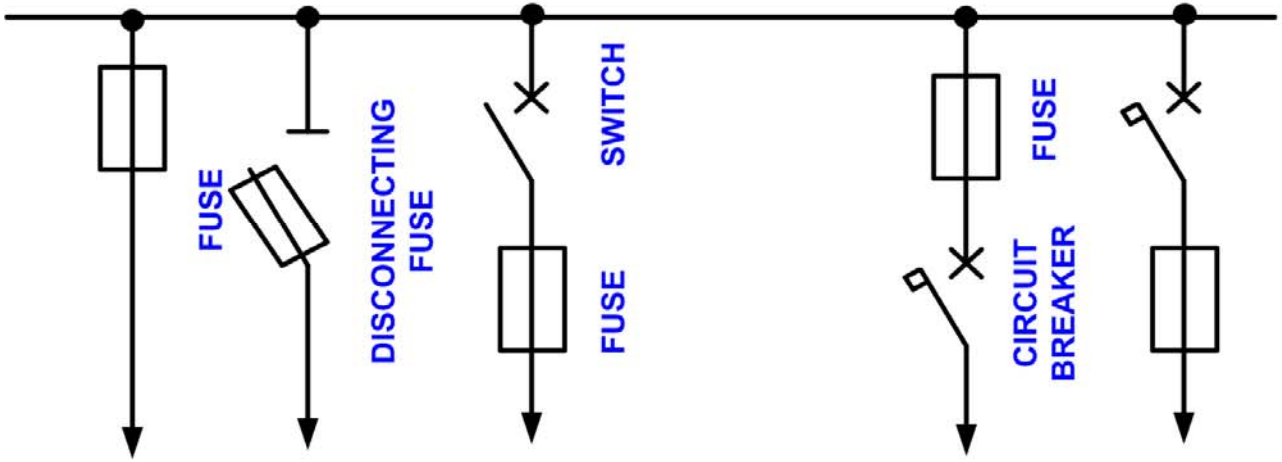

FUSE – AGAINST SHORT-CIRCUIT AND OVERLOADING

CIRCUIT BREAKER – OVERLOADING
FUSE – SHORT-CIRCUIT

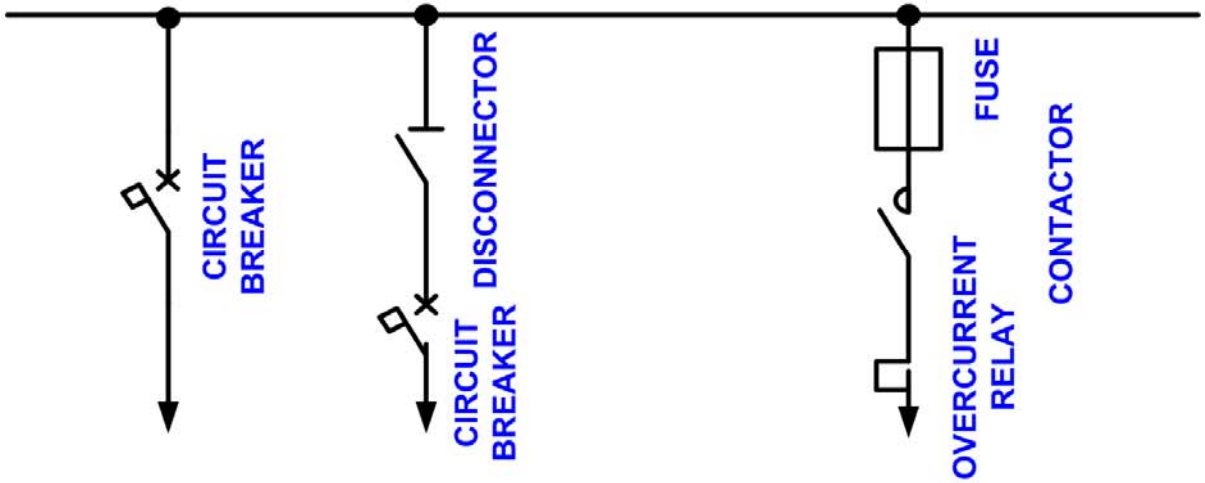

CIRCUIT BREAKER
SHORT-CIRCUIT + OVERLOADING

FUSE – SHORT-CIRCUIT
RELAY - OVELOADING

MAIN BRANCHES MV

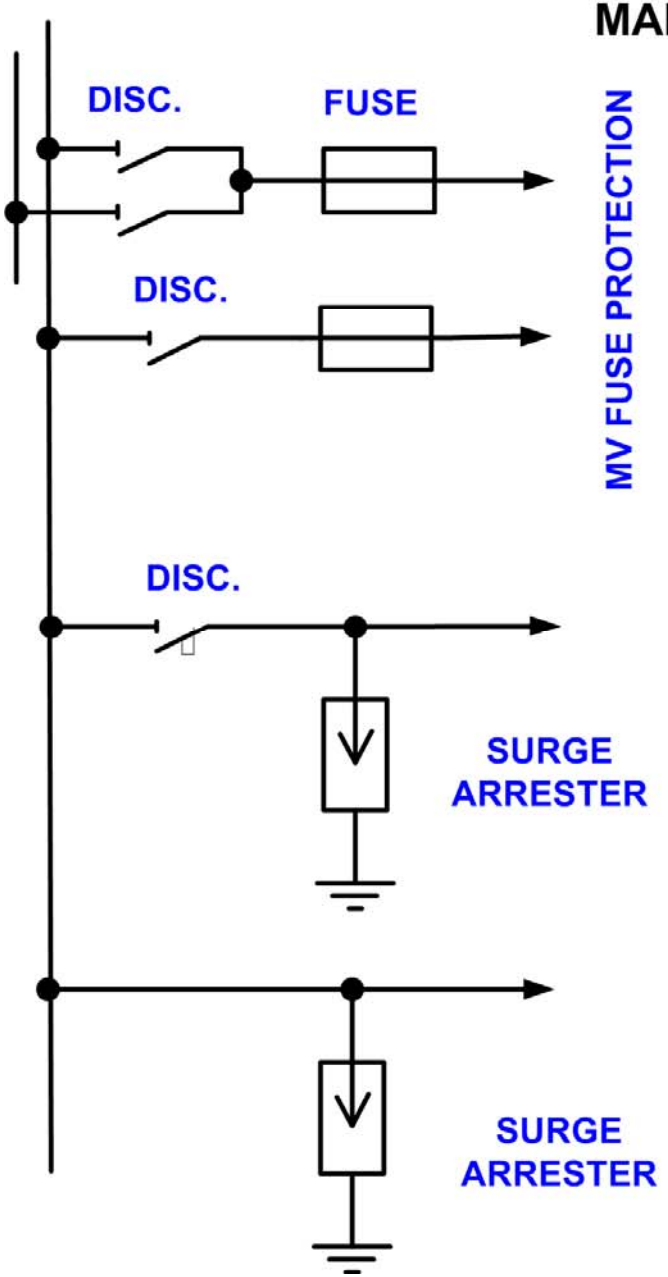

MV FUSE PROTECTION

PROTECTION AT THE INLET
BEGINNING IS ASSUMED

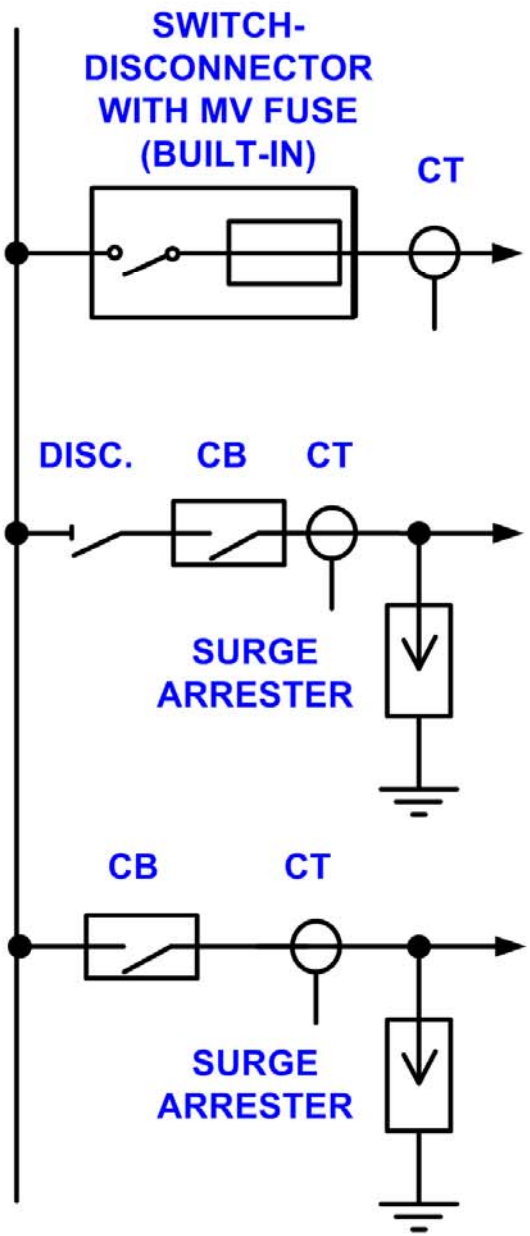

SECONDARY BRANCHES MV

LONGITUDINAL
BUSBAR DIVIDING
(DISCONNECTOR)

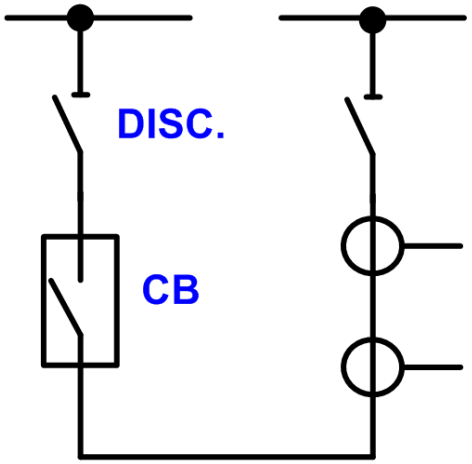

LONGITUDINAL
SWITCH

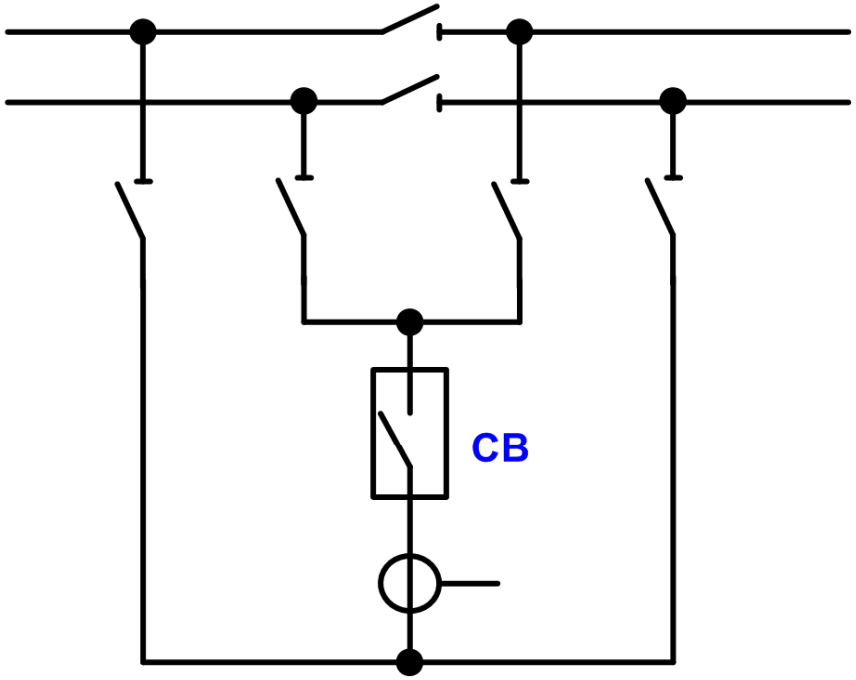

COMBINED SWITCH
LONGITUDINAL AND CROSS

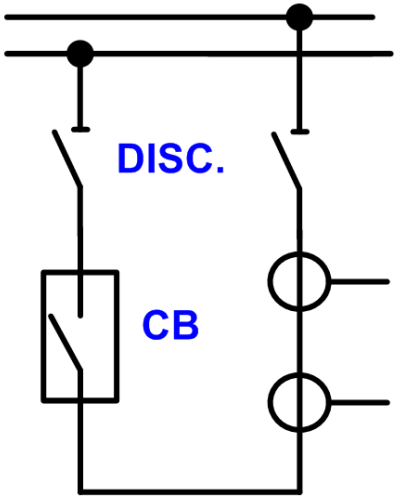

CROSS SWITCH

SECONDARY BRANCHES MV - MEASUREMENT

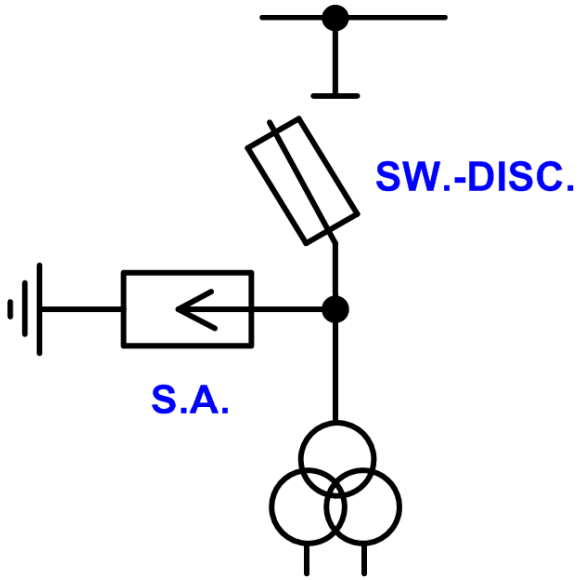

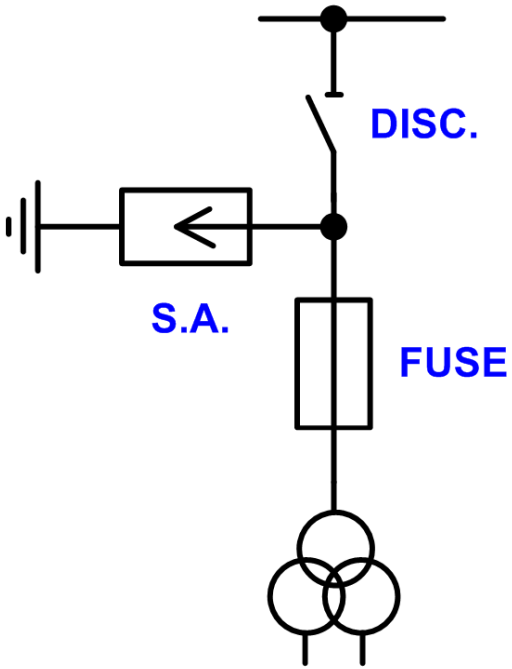

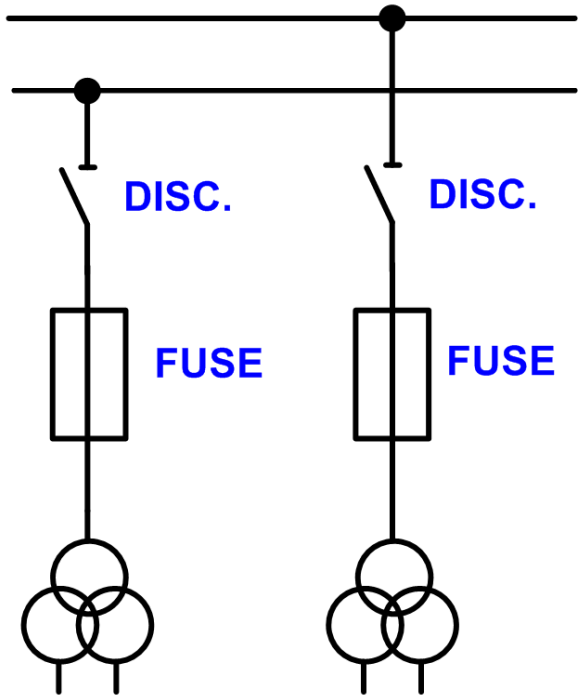

BOTH BUSBARS
MEASUREMENT

Branches from HV substations

Main

- generator
- transformer
- outlet for overhead line
- outlet for cable line

Secondary

- main busbars switch
- auxiliary busbars switch
- voltage measurement
- spare

GENERATOR BRANCHES

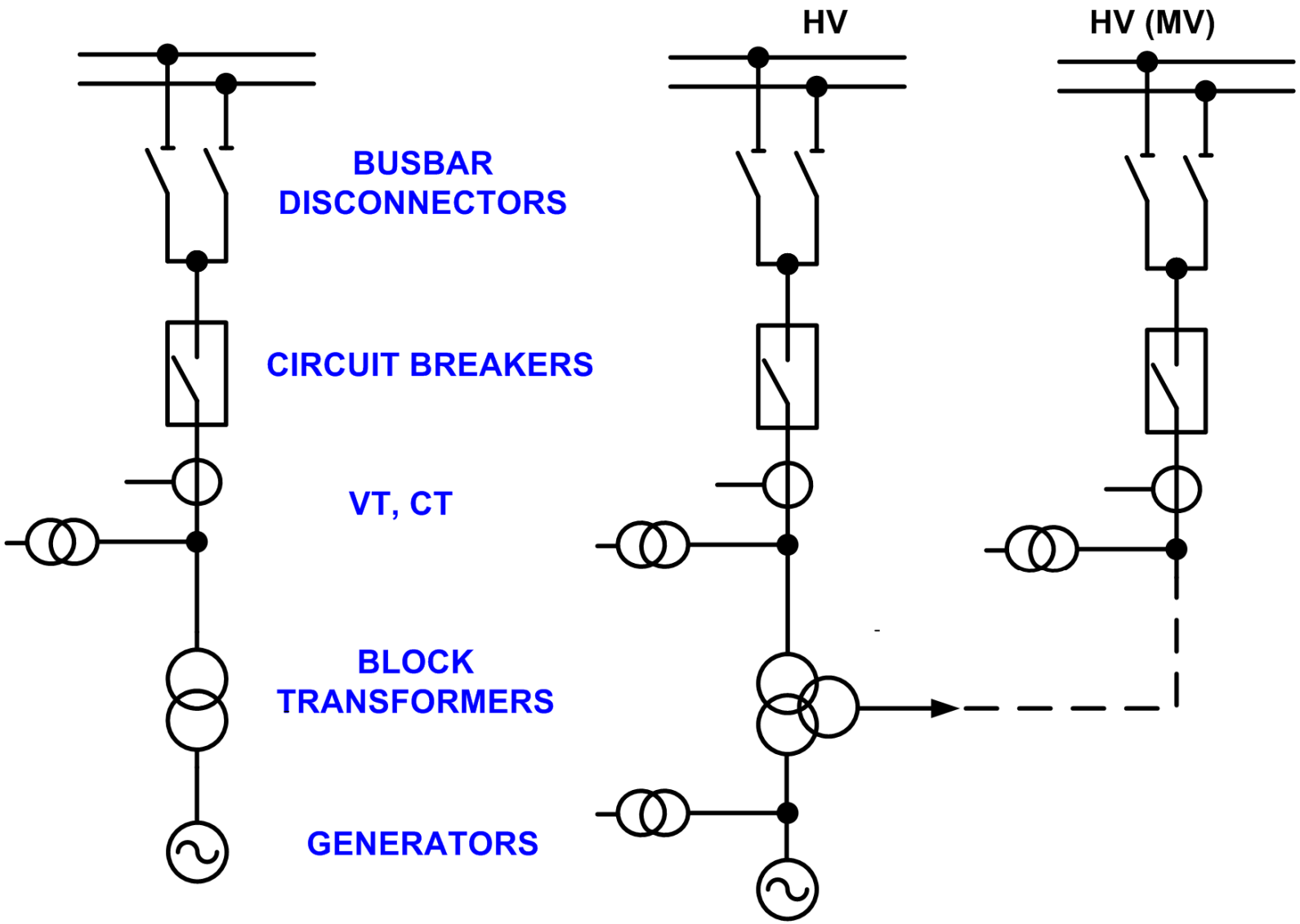

TRANSFORMATOR BRANCHES

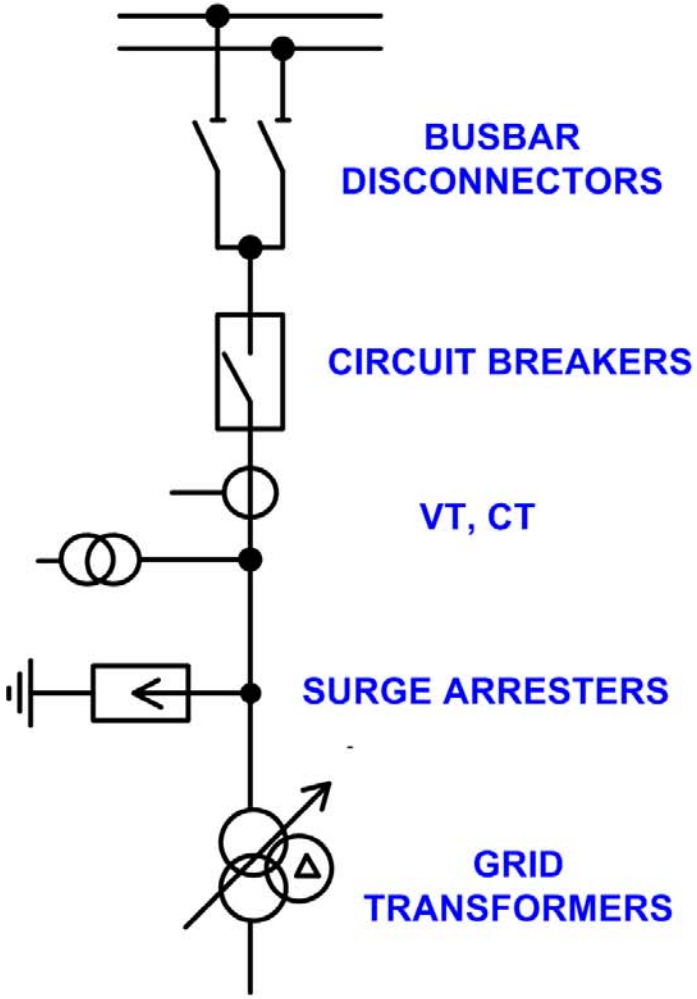

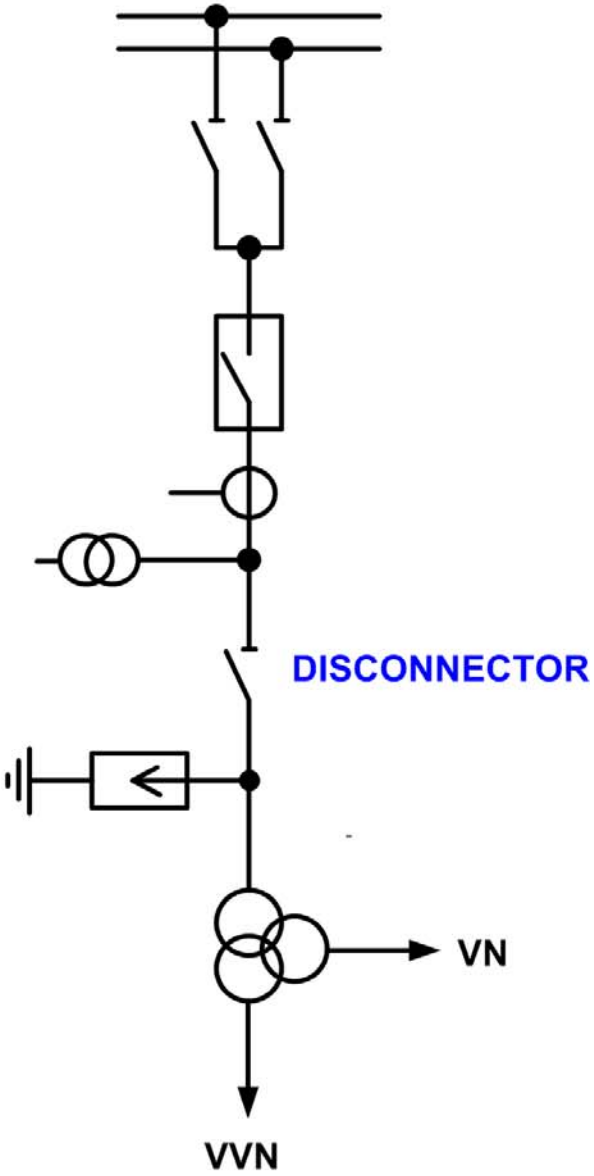

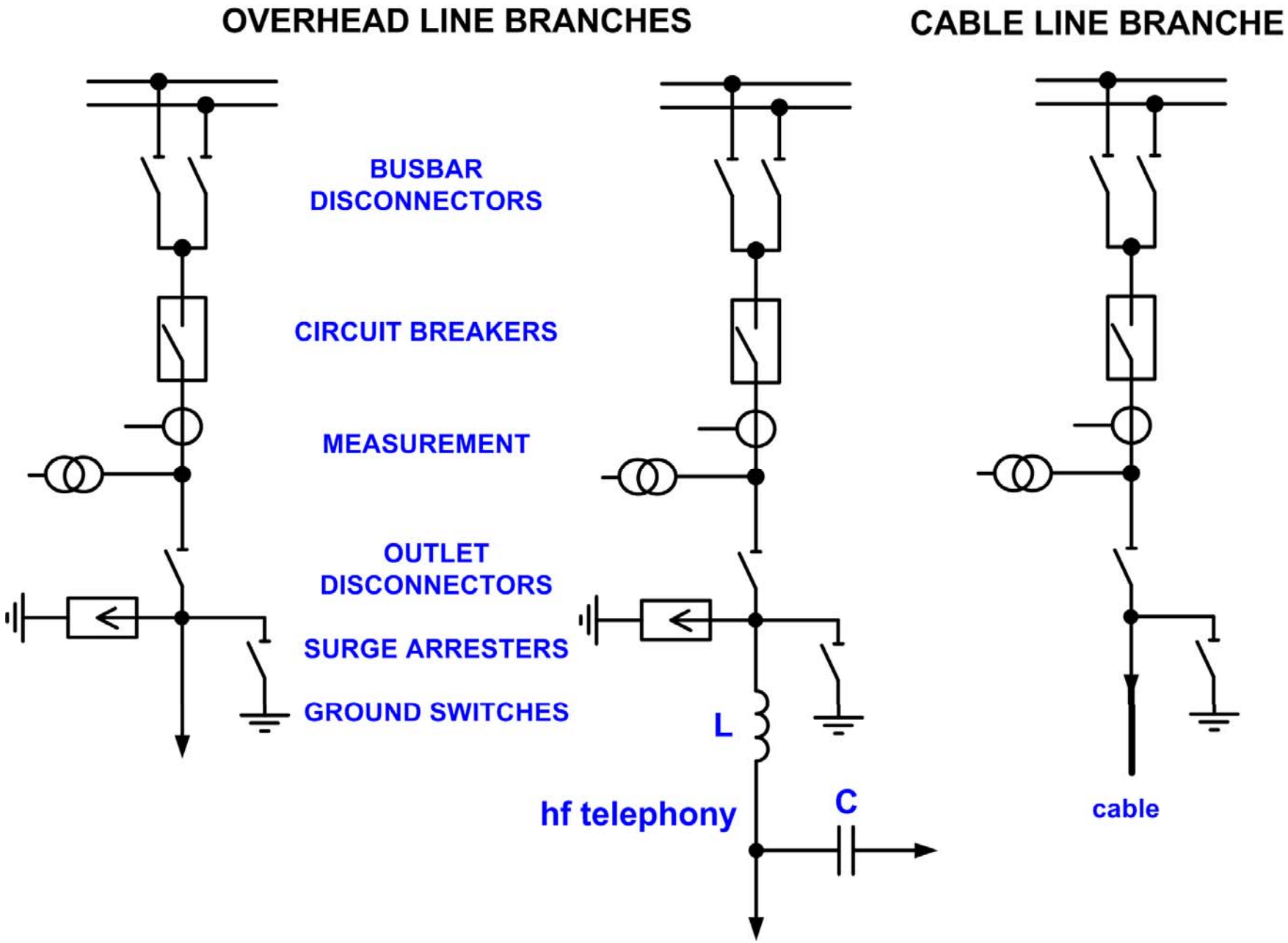
OVERHEAD LINE BRANCHES
CABLE LINE BRANCHE
BUSBAR DISCONNECTORS
CIRCUIT BREAKERS
MEASUREMENT
OUTLET DISCONNECTORS
SURGE ARRESTERS
GROUND SWITCHES
L
hf telephony
C
cable

SUBSTATION SELF-CONSUMPTION SUPPLYING

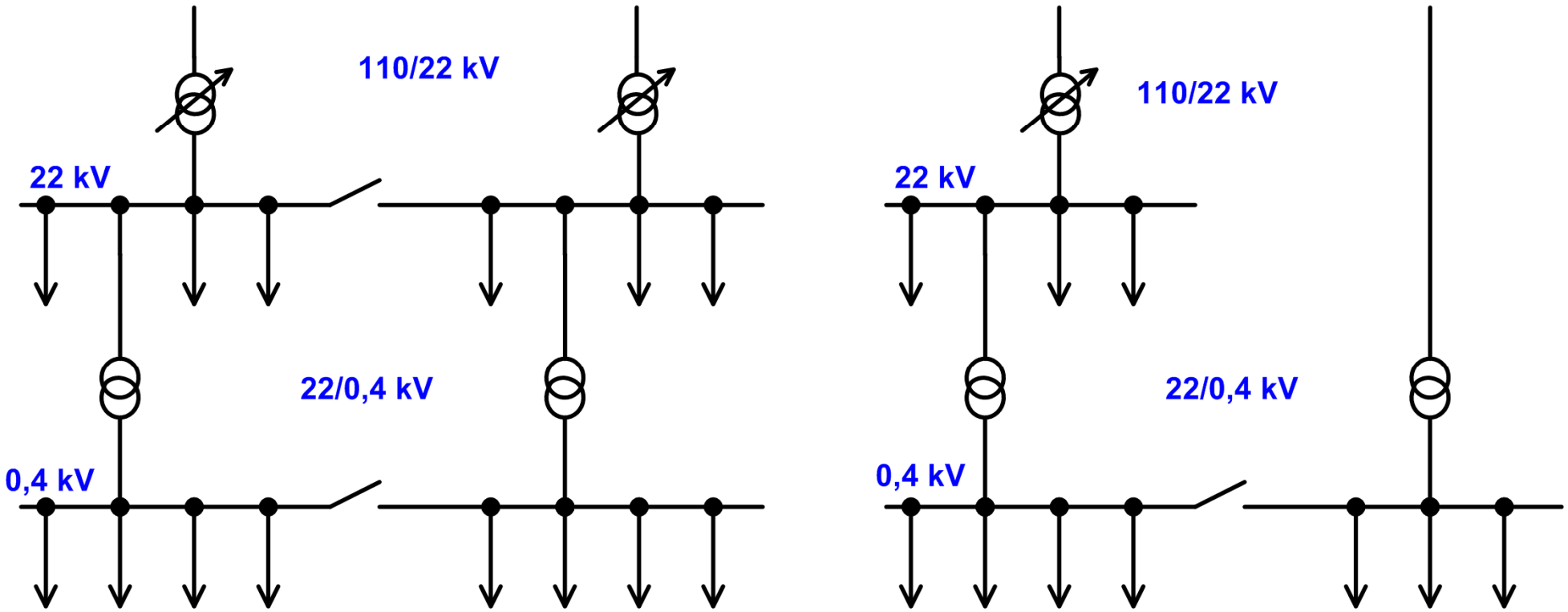

Electrical stations realization

1) Outside
2) Inside
    a) cells
    b) cabinets
    c) halls
    d) gas-insulated (GIS)

Cells

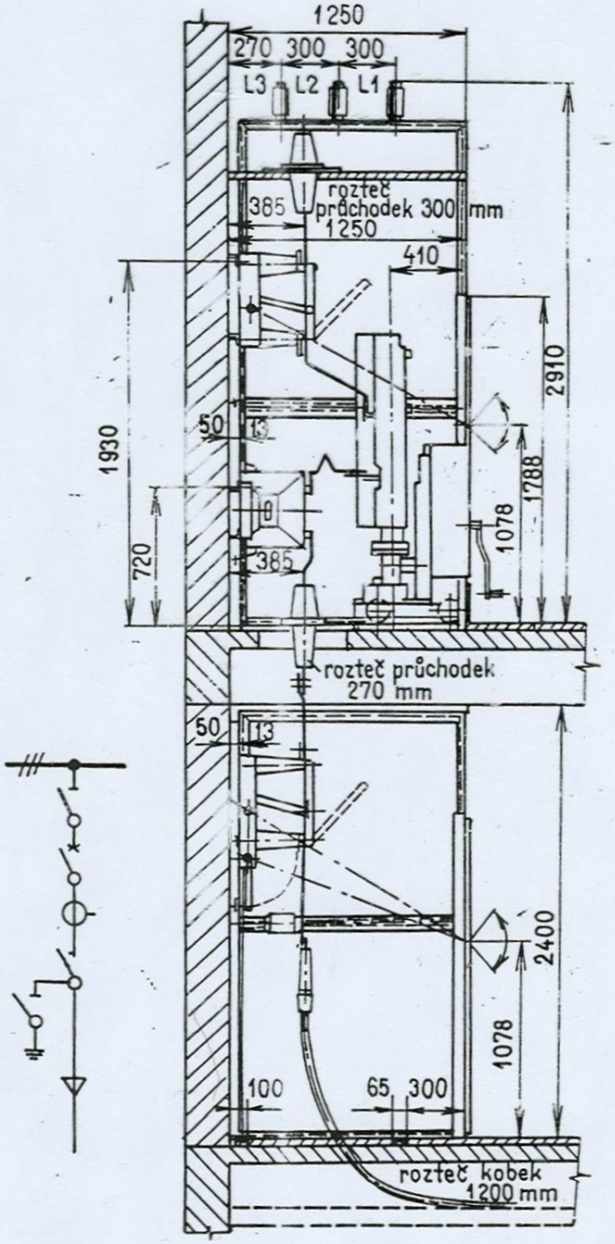

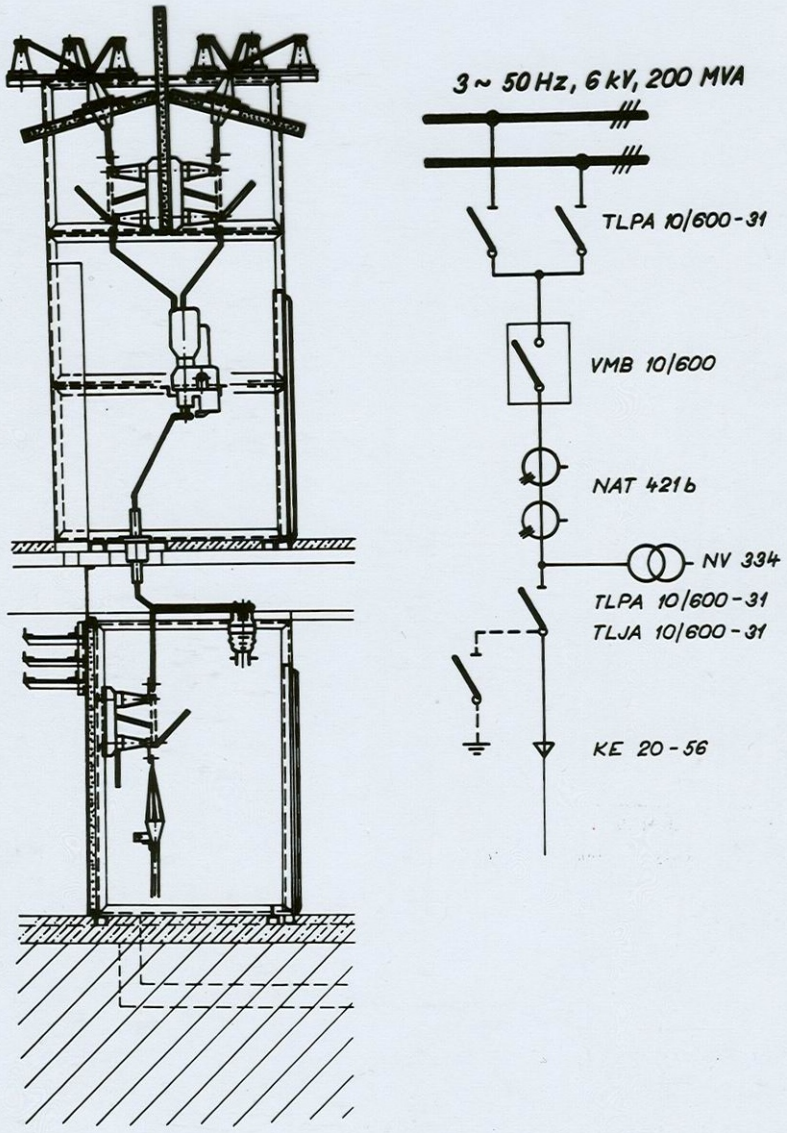

OBR. 2-34 VNITŘNÍ ROZVODNA 6 kV S DVOJITÝMI PŘÍPOJNICEMI
KOBKA PŘÍVODU

Cabinets

10 kV

Sliding CB

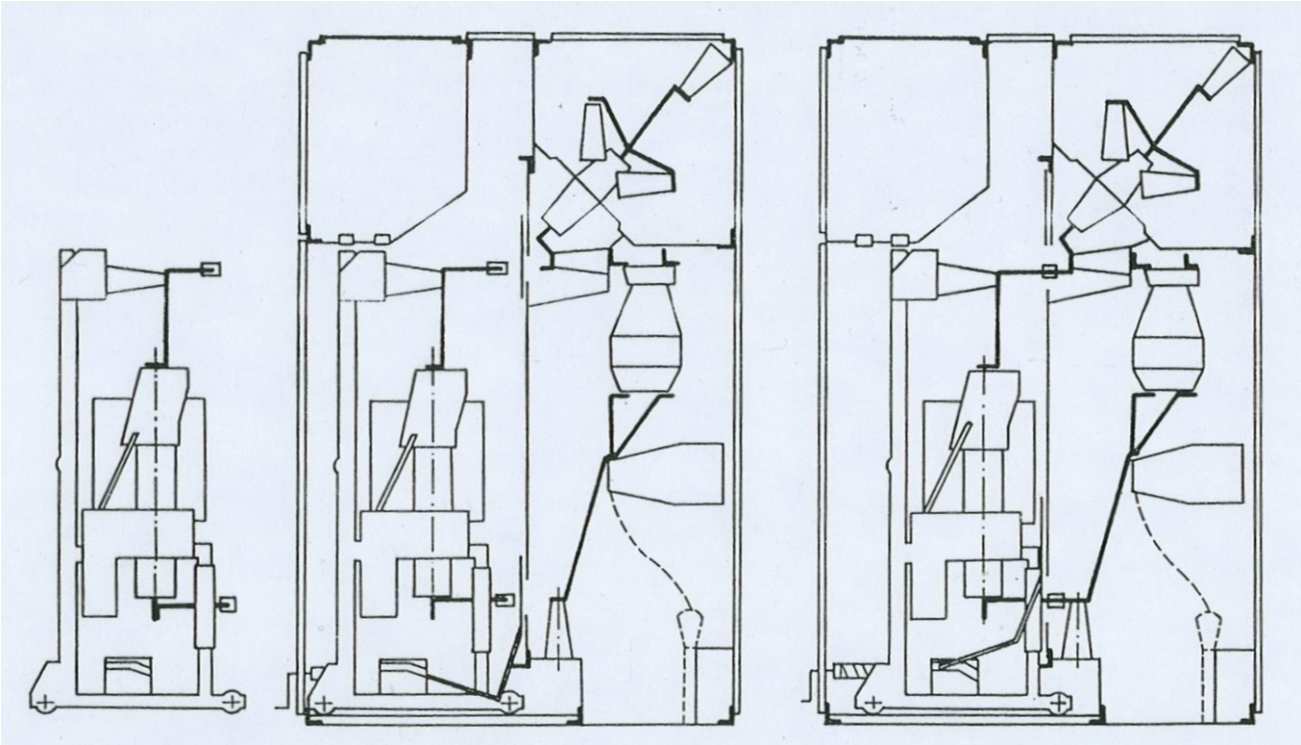

22 kV

Cell substations

+ highly clear arrangement
+ high operational reliability
+ high transmitted power
+ high short-circuit endurance
- high construction difficulty, costs

Cabinet substations

+ unification, variability
+ possibility of sliding CB (accessibility)
+ low construction costs
+ low space requirements
- lower reliability
- lower short-circuit endurance
- more difficult construction of double busbars

Gas insulated (GIS) – SF6

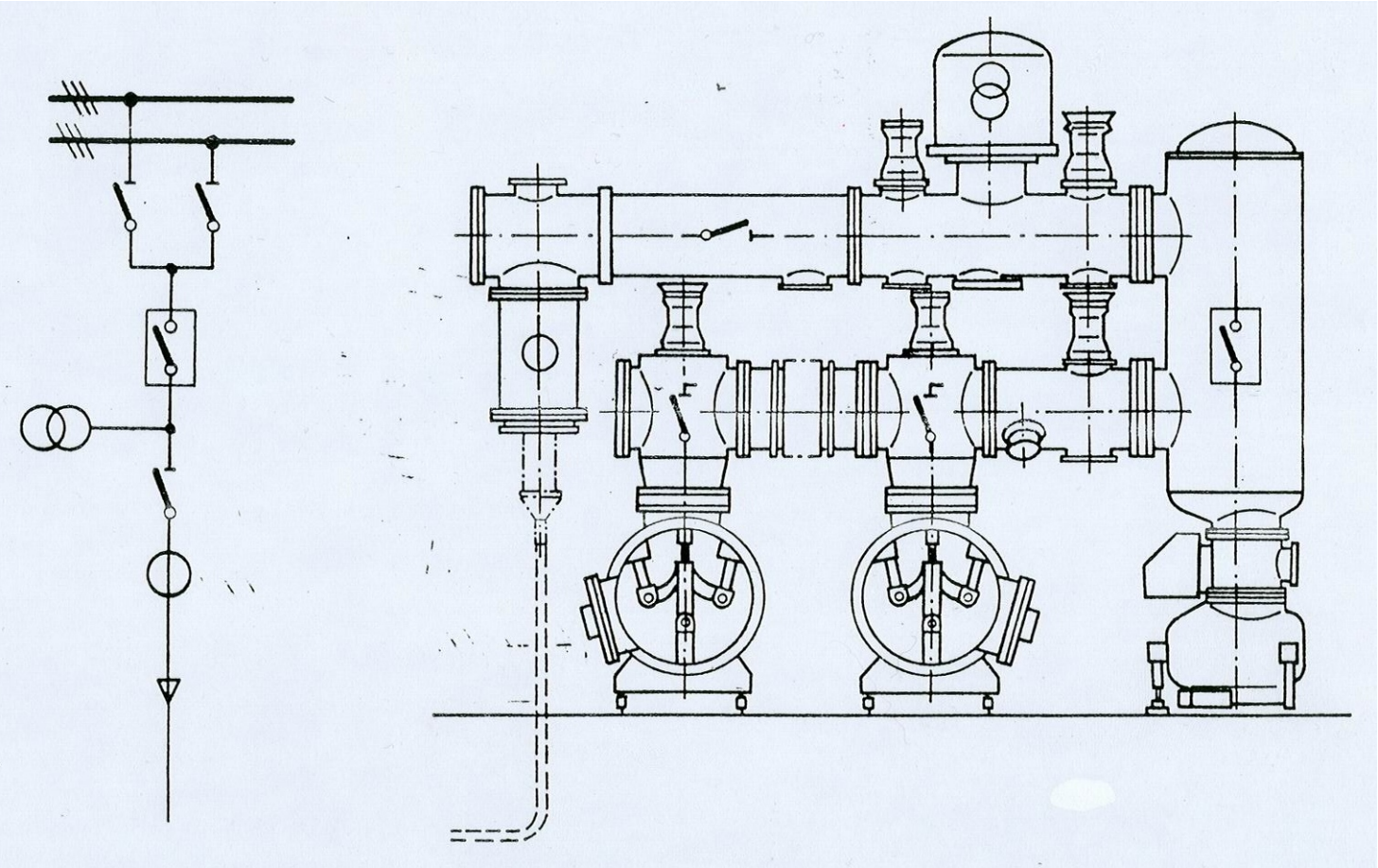

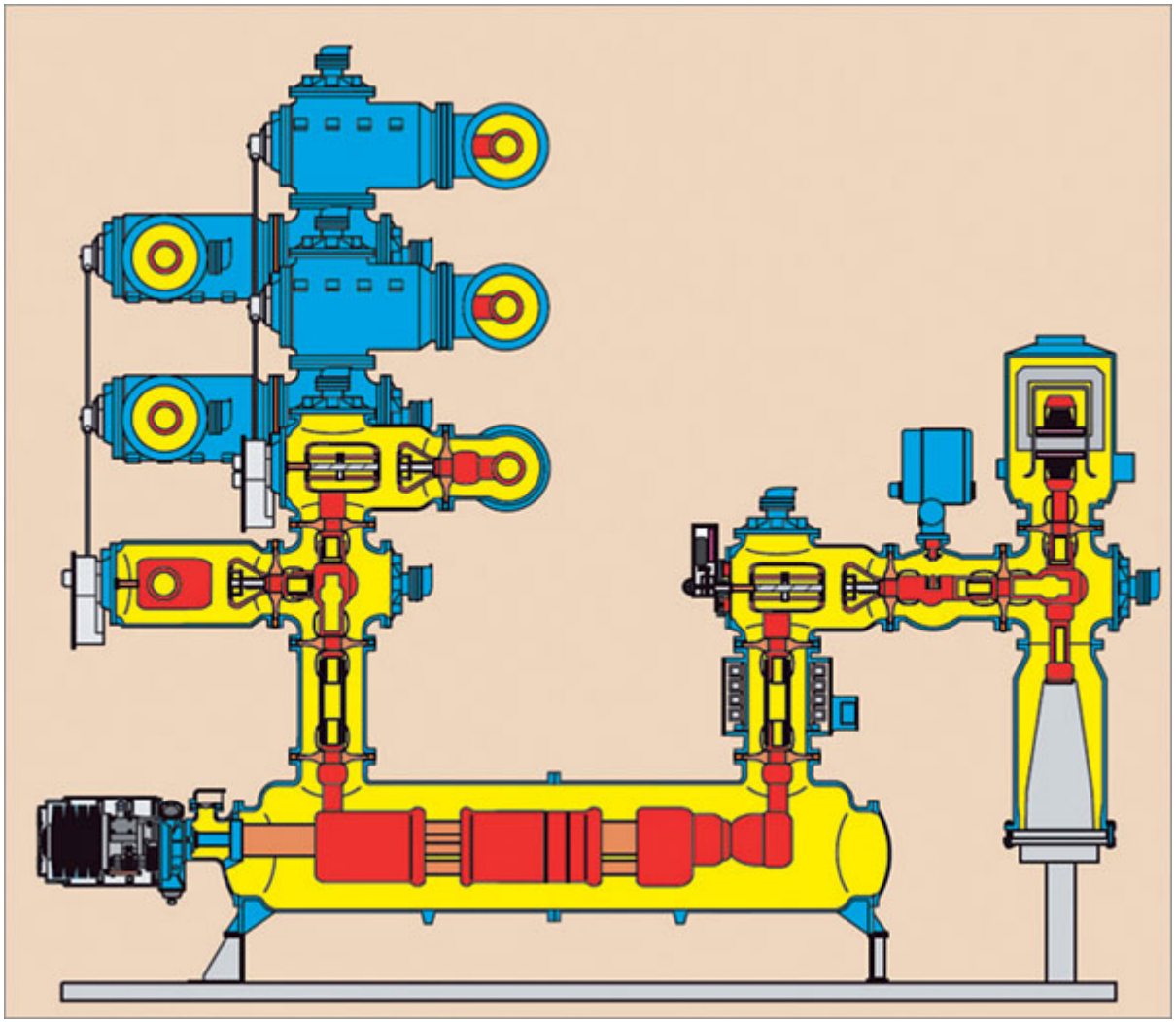

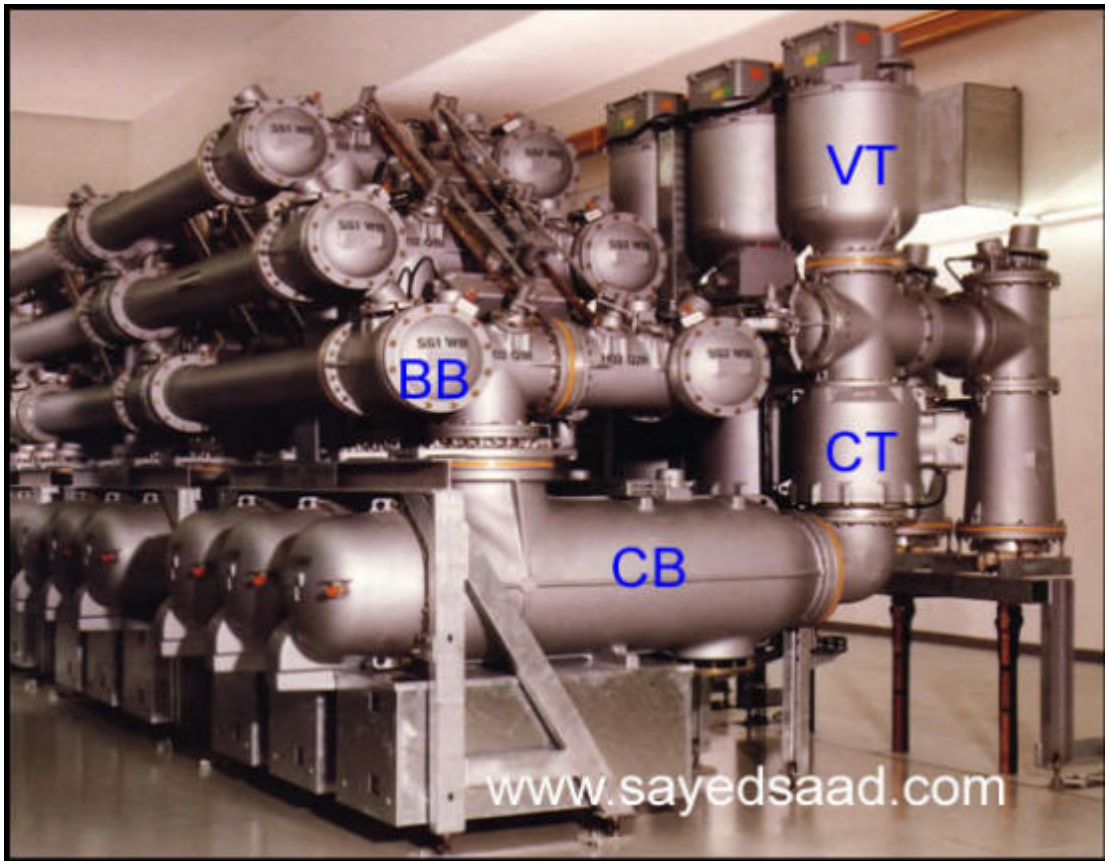
VT
BB
CT
CB
www.sayedsaad.com

Chotějovice 400 kV

Transformer stations

- placement
  - outside – ground, tower
  - inside – cell

-position in ES
  - production – MV/HV – block station
  - transmission – HV/HV – connecting
  - consumption – HV/MV, MV/LV – industry, public
  - insulating – 1/1

insulation
  - dry
  - oil – with reservoir

DC supply

1) protection relays
2) CB control circuits
3) signal lights and relays
4) hf equipment
5) emergency el. drives
6) emergency and spare lights

Voltage levels

24 48 60 110 220 V_{DC}

DC SWITCHGEAR