Power quality

Prof. as., PhD st. EPS dep., NRU MPEI
master Rinat Nasyrov

Voltage range (AC)

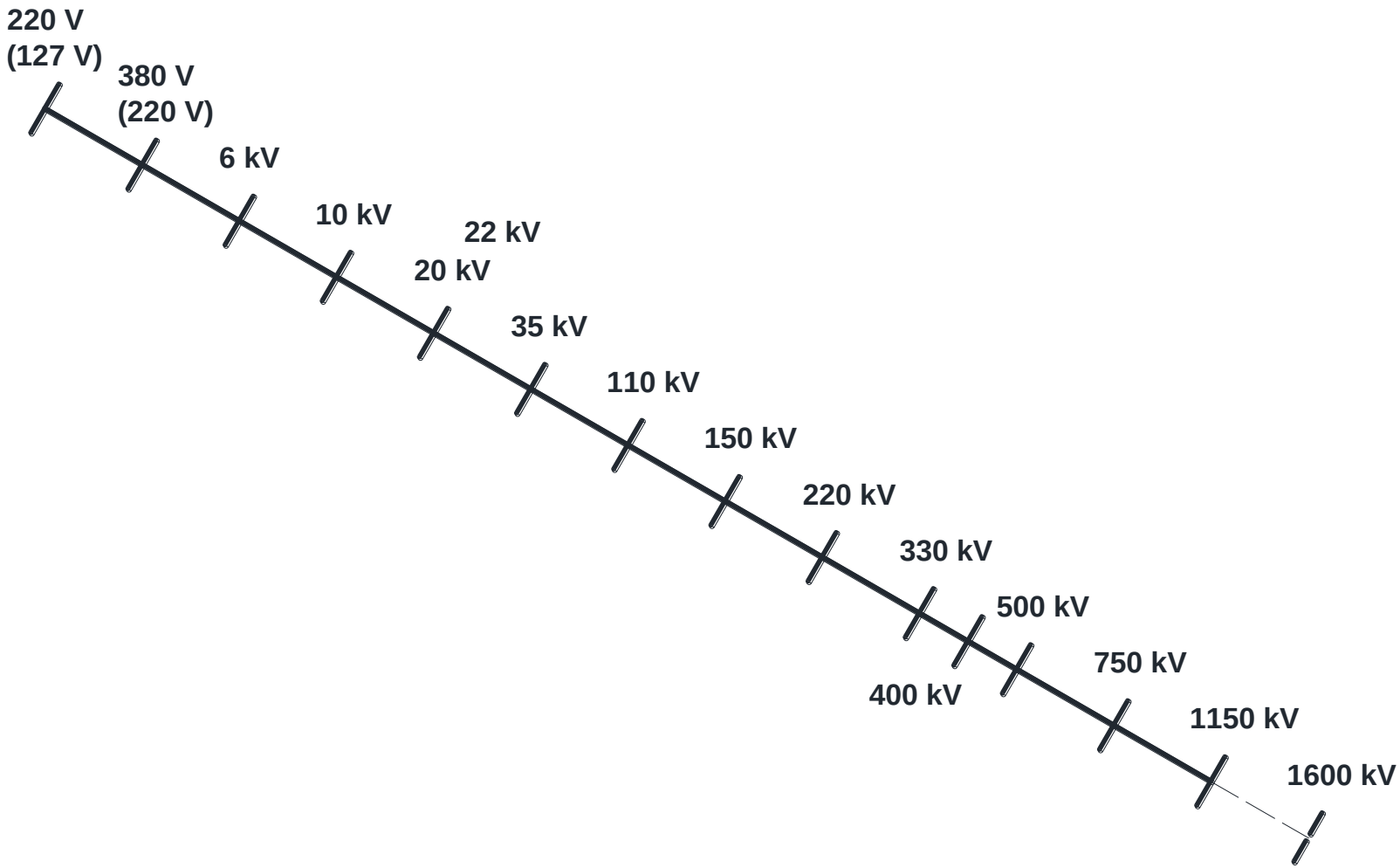

??? PQ ???

PQ ???

PQ ???

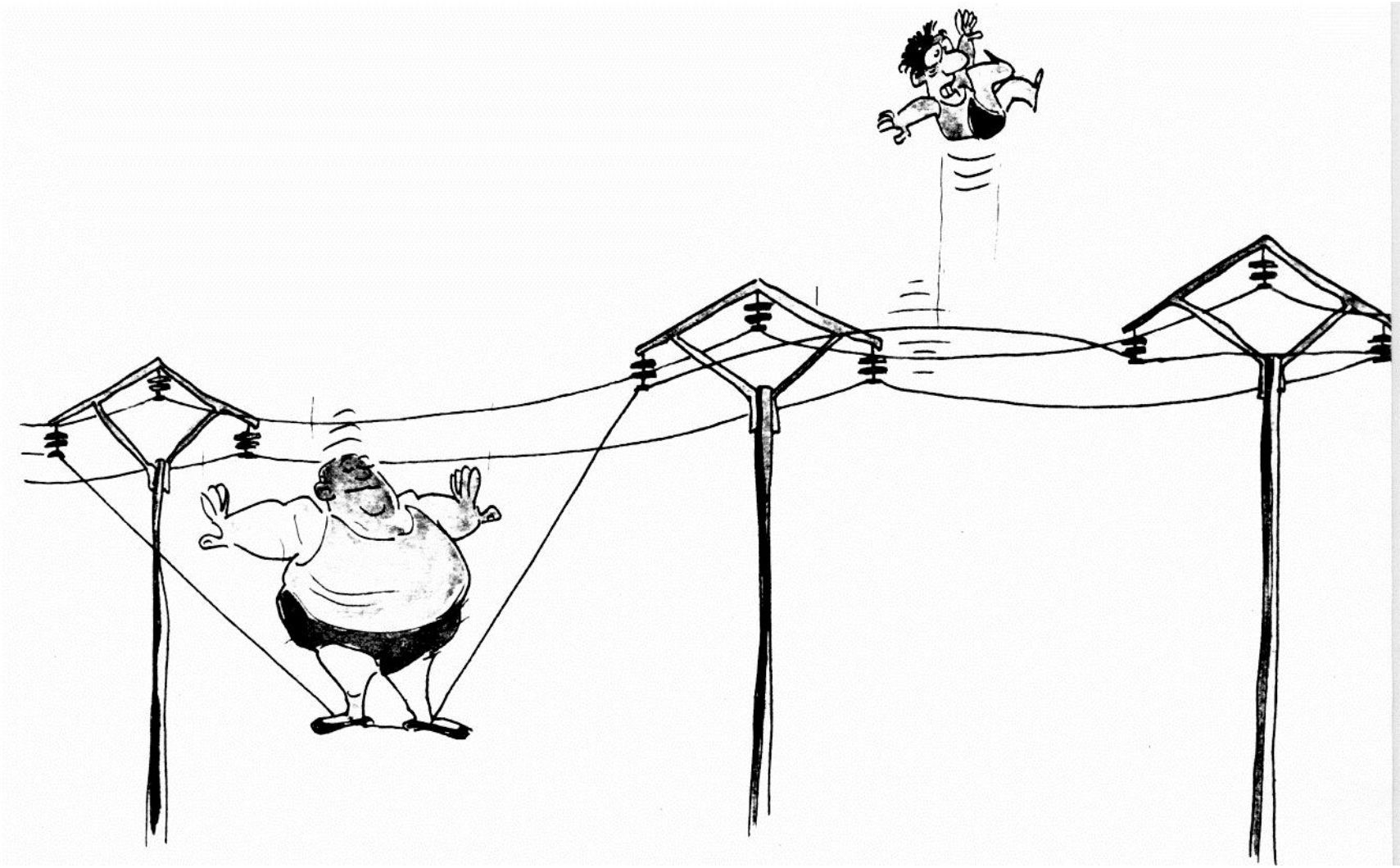

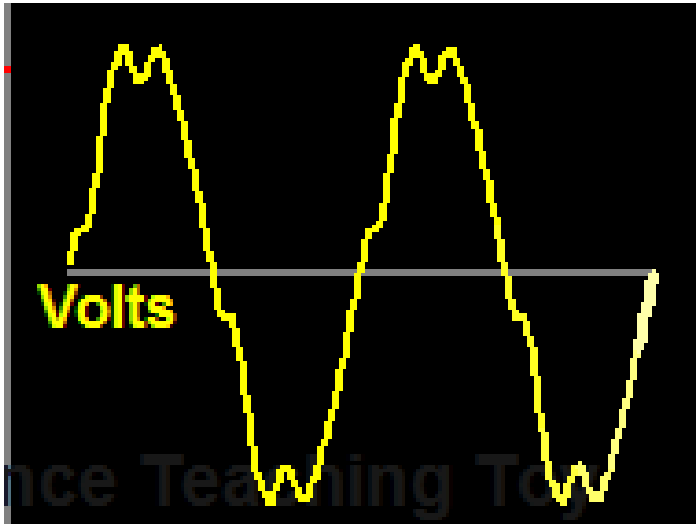

PQ ??? –> PQ !!!

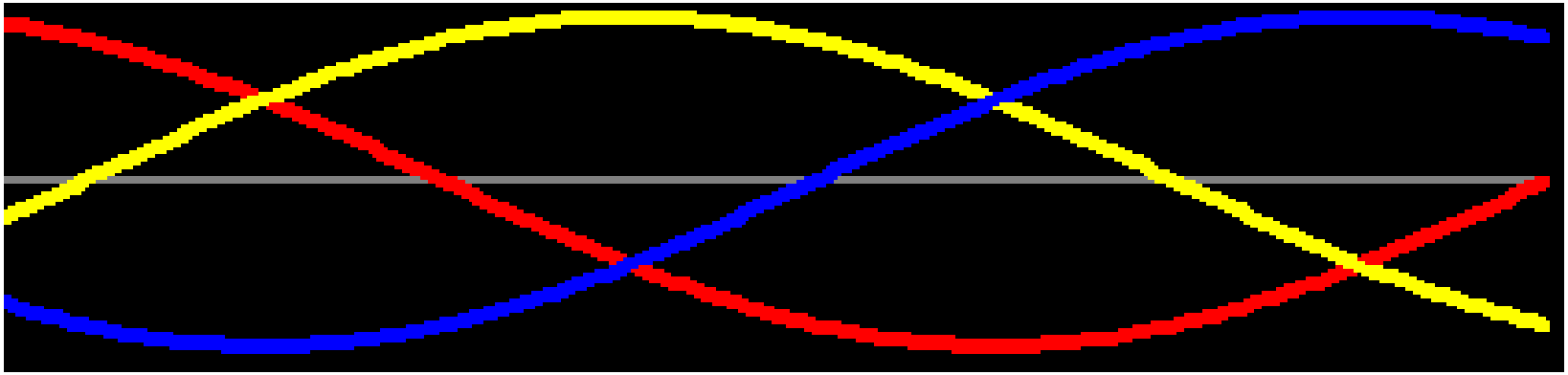

Famous persons

Charles LeGyt Fortescue,1876–1936

Jean Baptiste Joseph Fourier, 1768 - 1830

Power quality indexes

Normalized PQ is depends on country's regulations and norms.

e.g. there are 11 indexes of PQ in Russia. It's classified on 3 groups:

1 group:

-variation of frequency Δf,

-variation of voltage δU.

2 group:

-distortion sinusoidal voltage waveform K_U

-harmonics $K_{U(n)}$

-negative sequence quantity K_{2U}

-zero sequence quantity K_{0U}

-amplitude of voltage fluctuations δU_t

-flicker P_{St} & P_{Lt}

3 group:

-sag δU_s

-overvoltage K_{U0}

-voltage pulses U_{pulses}

Norms PQ

Index	Formula	Norm value: normally/maximum allowed
Δf	$\Delta f = f_c - f_{nom}$	±0,02/±0,04 Hz

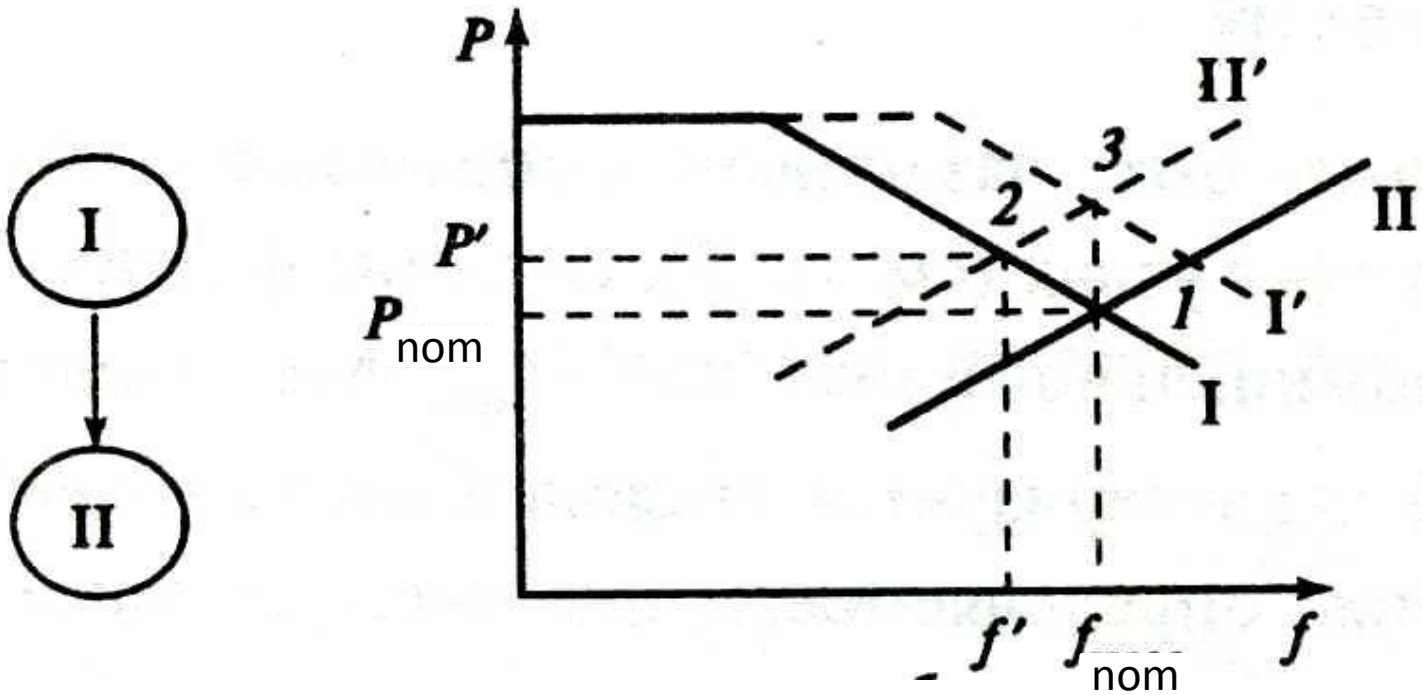

Norms PQ

Index	Formula	Norm value: normally/maximum allowed
δU	$\delta U = \frac{U_c - U_{rat}}{U_{rat}} 100,\%.$	±5/±10 %

Norms PQ

Index	Formula	Norm value: normally/maximum allowed
δU	$\delta U = \frac{U_c - U_{rat}}{U_{rat}} 100,\%.$	±5/±10 %

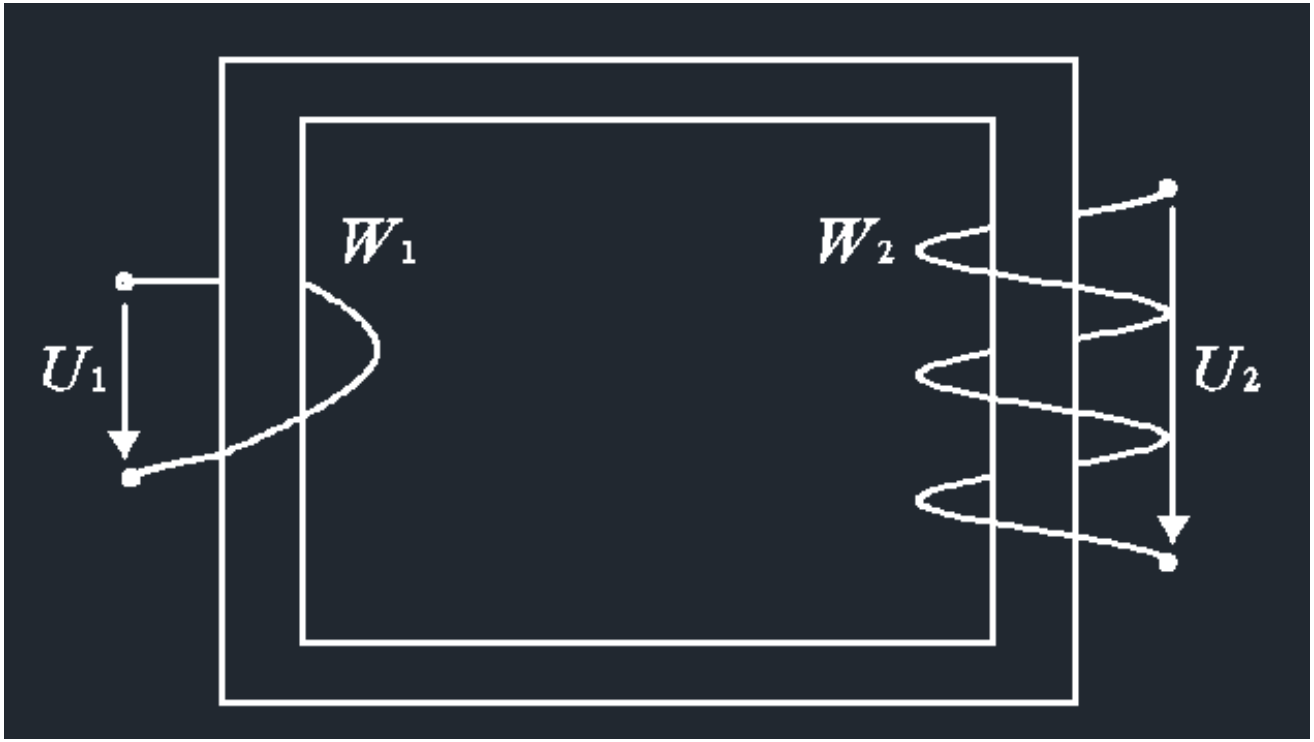

$$e_w = \frac{U_1}{W_1} = \frac{U_2}{W_2}$$

Norms PQ

Index	Formula	Norm value: normally/maximum allowed
K_U	$K_U = \frac{\sqrt{\sum_{2}^{N} U_{(n)}^2}}{U_{(1)}} \cdot 100.$	Depends on the rated voltage (e.g. 6-20 kV: 5,0/8,0%)
$K_{U(n)}$	$K_{U(n)} = \frac{U_{(n)}}{U_{(1)}} \cdot 100$	Depends on the rated voltage and *n*. e.g. 6-20 kV, *n*=5: 4,0/6,0%)

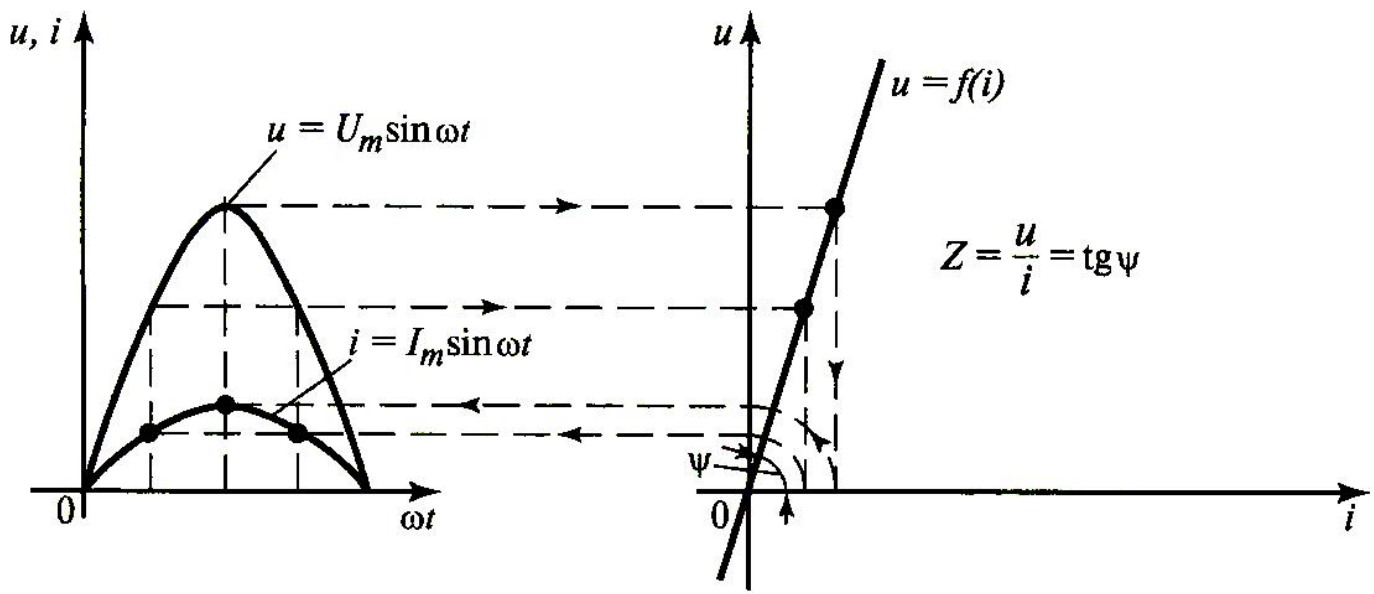

Norms PQ

Index	Formula	Norm value: normally/maximum allowed
K_U	$K_U = \frac{\sqrt{\sum_{2}^{N} U_{(n)}^2}}{U_{(1)}} \cdot 100.$	Depends on the rated voltage (e.g. 6-20 kV: 5,0/8,0%)
$K_{U(n)}$	$K_{U(n)} = \frac{U_{(n)}}{U_{(1)}} \cdot 100$	Depends on the rated voltage and *n*. e.g. 6-20 kV, *n*=5: 4,0/6,0%)

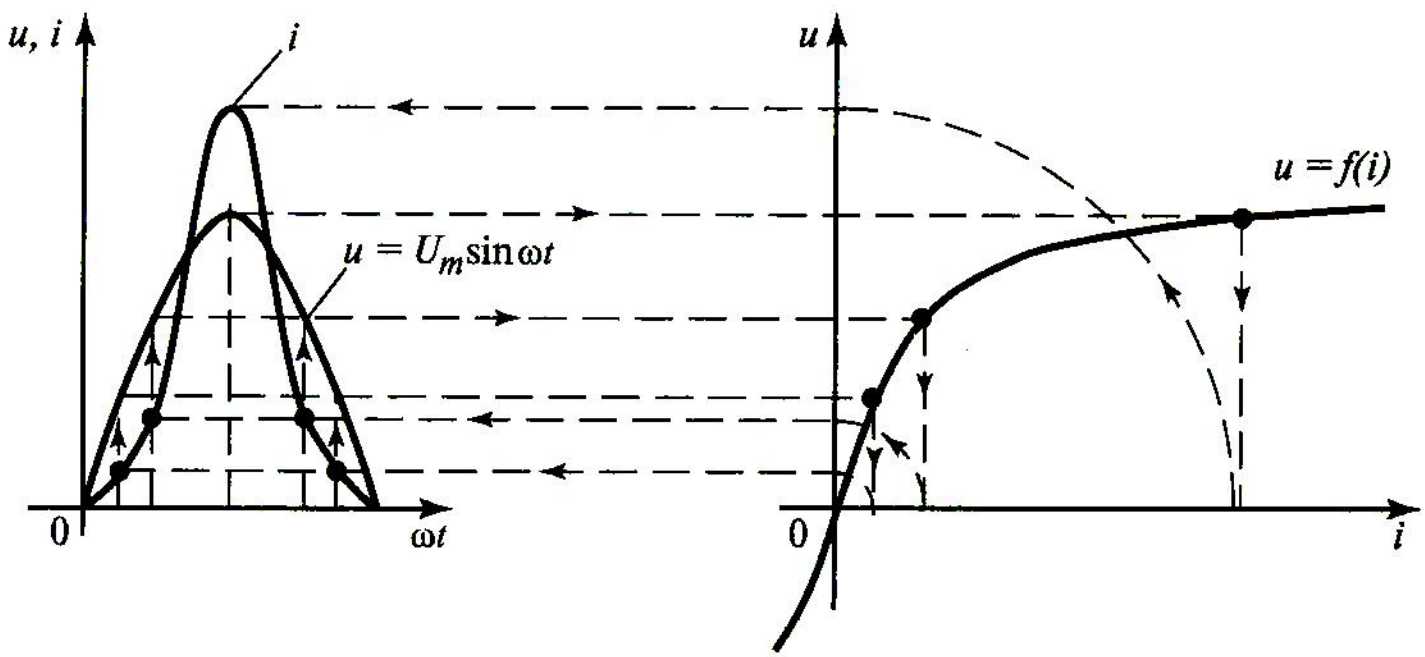

Norms PQ

Index	Formula	Norm value: normally/maximum allowed
K_U	$K_U = \frac{\sqrt{\sum_{2}^{N} U_{(n)}^2}}{U_{(1)}} \cdot 100.$	Depends on the rated voltage (e.g. 6-20 kV: 5,0/8,0%)
$K_{U(n)}$	$K_{U(n)} = \frac{U_{(n)}}{U_{(1)}} \cdot 100$	Depends on the rated voltage and *n*. e.g. 6-20 kV, *n*=5: 4,0/6,0%)

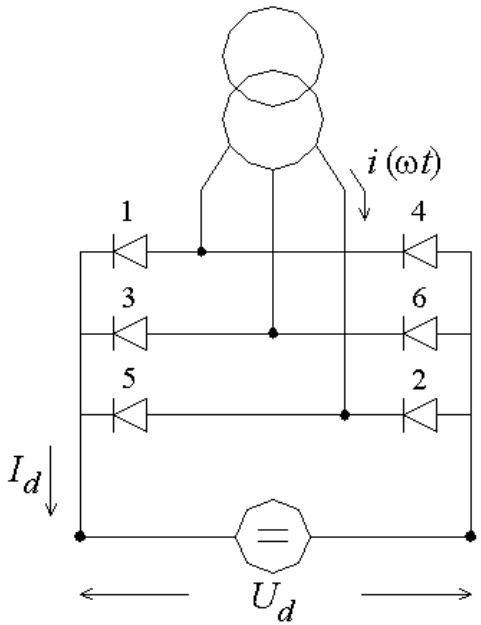

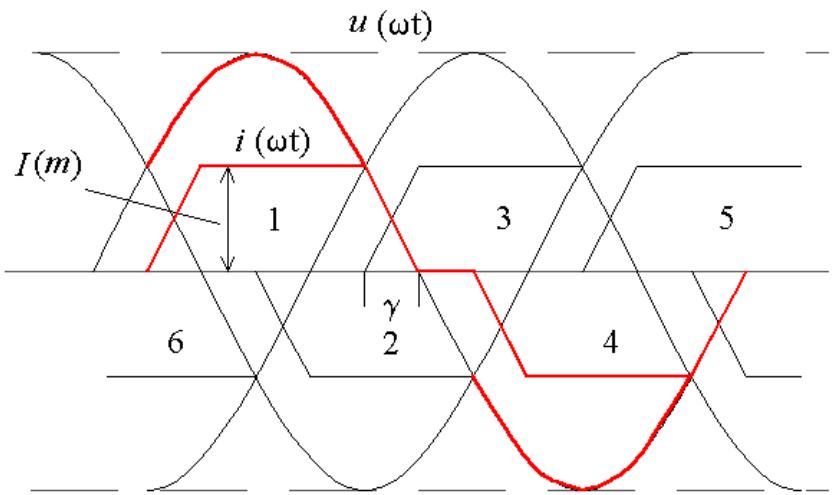

Norms PQ

Index	Formula	Norm value: normally/maximum allowed
K_U	$K_U = \frac{\sqrt{\sum_{2}^{N} U_{(n)}^2}}{U_{(1)}} \cdot 100.$	Depends on the rated voltage (e.g. 6-20 kV: 5,0/8,0%)
$K_{U(n)}$	$K_{U(n)} = \frac{U_{(n)}}{U_{(1)}} \cdot 100$	Depends on the rated voltage and *n*. e.g. 6-20 kV, *n*=5: 4,0/6,0%)

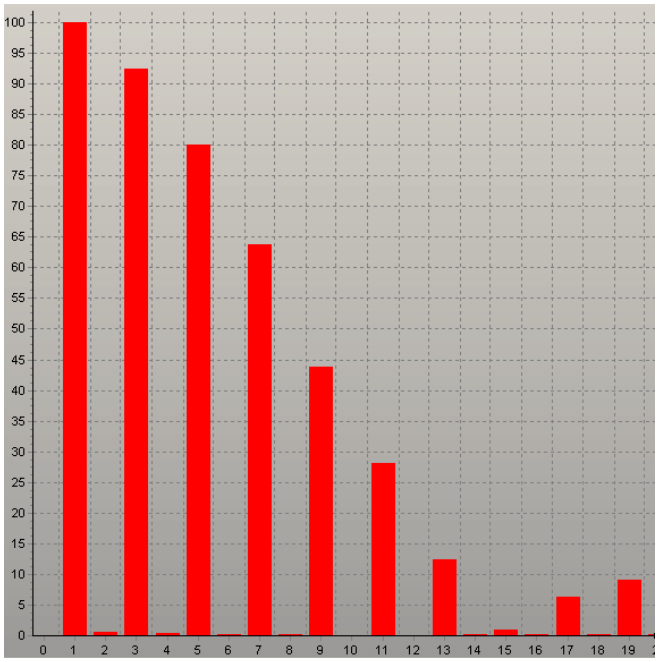

Norms PQ by ГОСТ 13109

Index	Formula	Norm value: normally/maximum allowed
K_{2U}	$K_{2U} = \frac{U_{2(1)}}{U_{1(1)}} \cdot 100$	2,0/4,0 %
K_{0U}	$K_{0U} = \frac{U_{0(1)}}{U_{rat}} \cdot 100$	Four wire 0,38 kV only! 2,0/4,0 %

positive sequence voltage: $\underline{U}_{1(1)} = 1/3 \cdot (\underline{U}_A + a^* \cdot \underline{U}_B + a^2 \cdot \underline{U}_C)$;

negative sequence voltage: $\underline{U}_{2(1)} = 1/3 \cdot (\underline{U}_A + a^2 \cdot \underline{U}_B + a \cdot \underline{U}_C)$;

zero sequence voltage: $\underline{U}_{0(1)} = 1/3 \cdot (\underline{U}_A + \underline{U}_B + \underline{U}_C)$,

where $\underline{U}_A$, $\underline{U}_B$, $\underline{U}_C$ – RMS (L-N) voltage.

$$* \; a = e^{j2\pi/3} = e^{j120^\circ} = -\frac{1}{2} + j\frac{\sqrt{3}}{2}$$

Norms PQ by ГОСТ 13109

Index	Formula	Norm value: normally/maximum allowed
δU_t	$\delta U_t = \frac{\lvert U_i - U_{i+1} \rvert}{U_{\text{ном}}} \cdot 100,$	See fig!
P_{St} P_{Lt}	See fig!	See fig!
$K_{\text{упер}}$	NO	NO
$U_{\text{имп}}$	NO	NO
$\delta U_{\text{п}}$	NO	NO

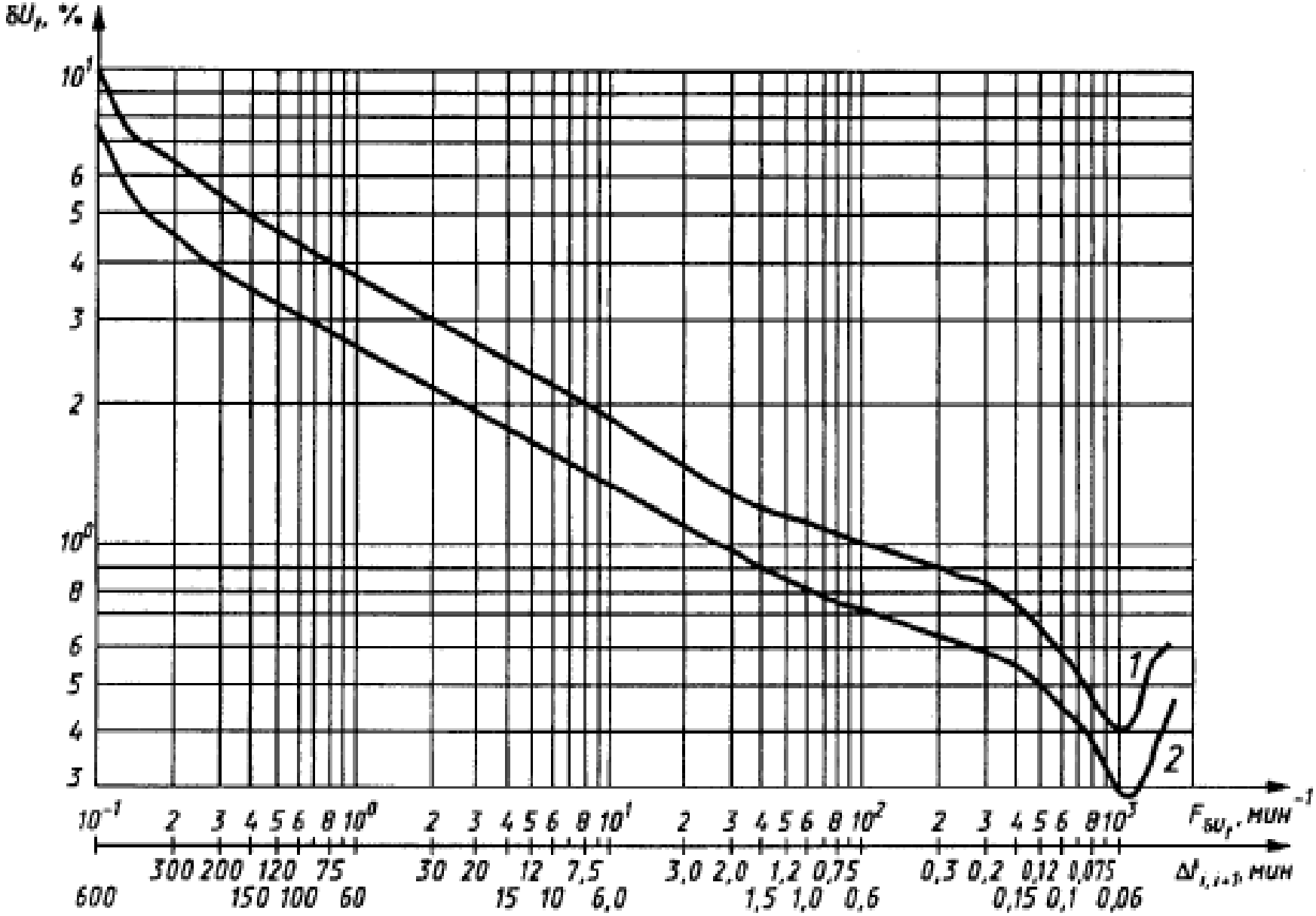
δU_f, %
10^1
6
5
4
3
2
10^0
8
6
5
4
3
1
2
10^-1 2 3 4 5 6 8 10^0 2 3 4 5 6 8 10^1 2 3 4 5 6 8 10^2 2 3 4 5 6 8 10^3
F_δU_f, мин^-1
600 300 200 150 120 100 75 60 30 20 15 12 10 7,5 6,0 3,0 2,0 1,5 1,2 1,0 0,75 0,6 0,3 0,2 0,15 0,12 0,1 0,075 0,06
Δt_i,i+1, мин

How to normalized PQ

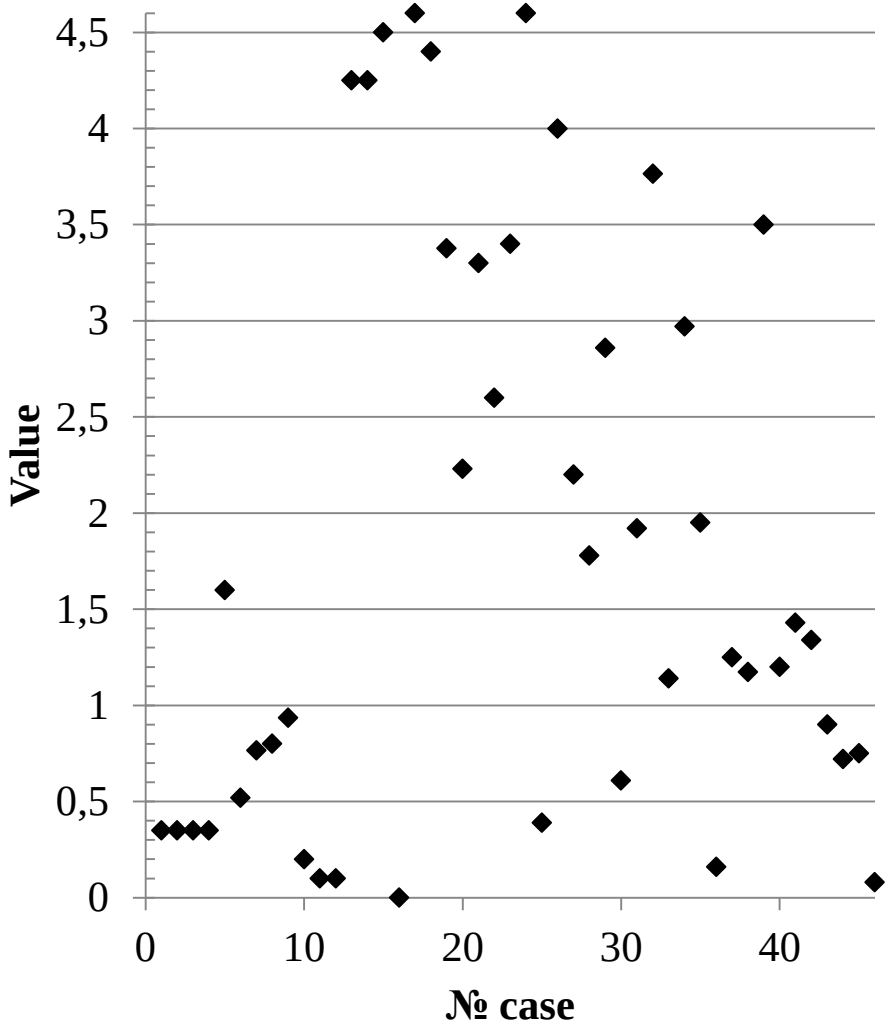

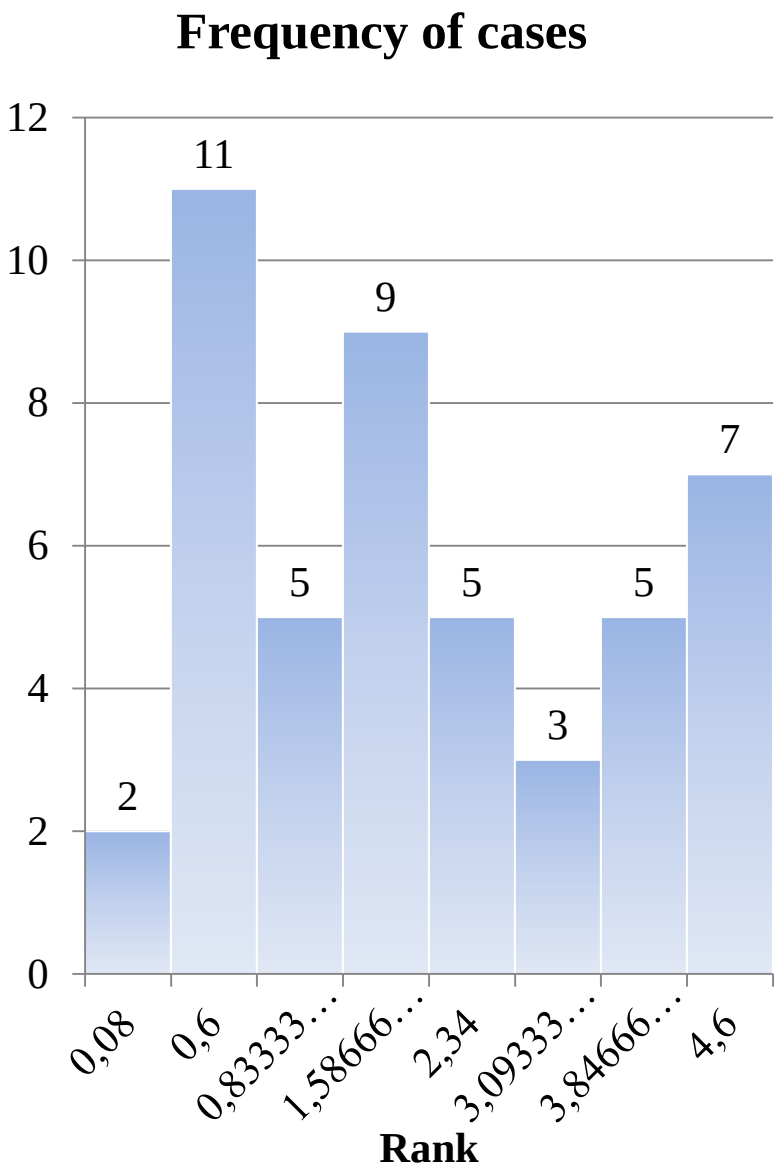

How to normalized PQ

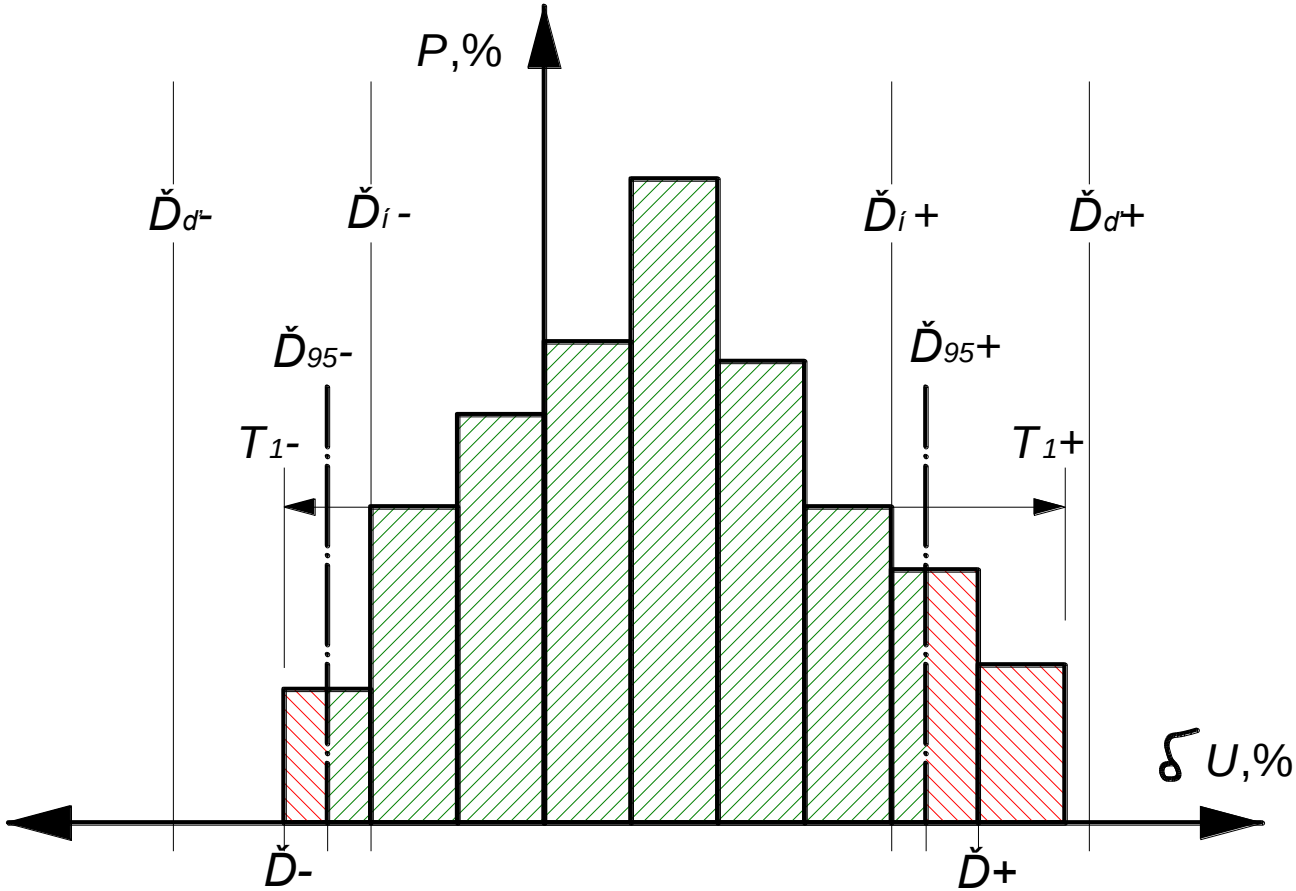

Where is the
course of reduction
PQ

Δf

Generator

Short-circuit

Load

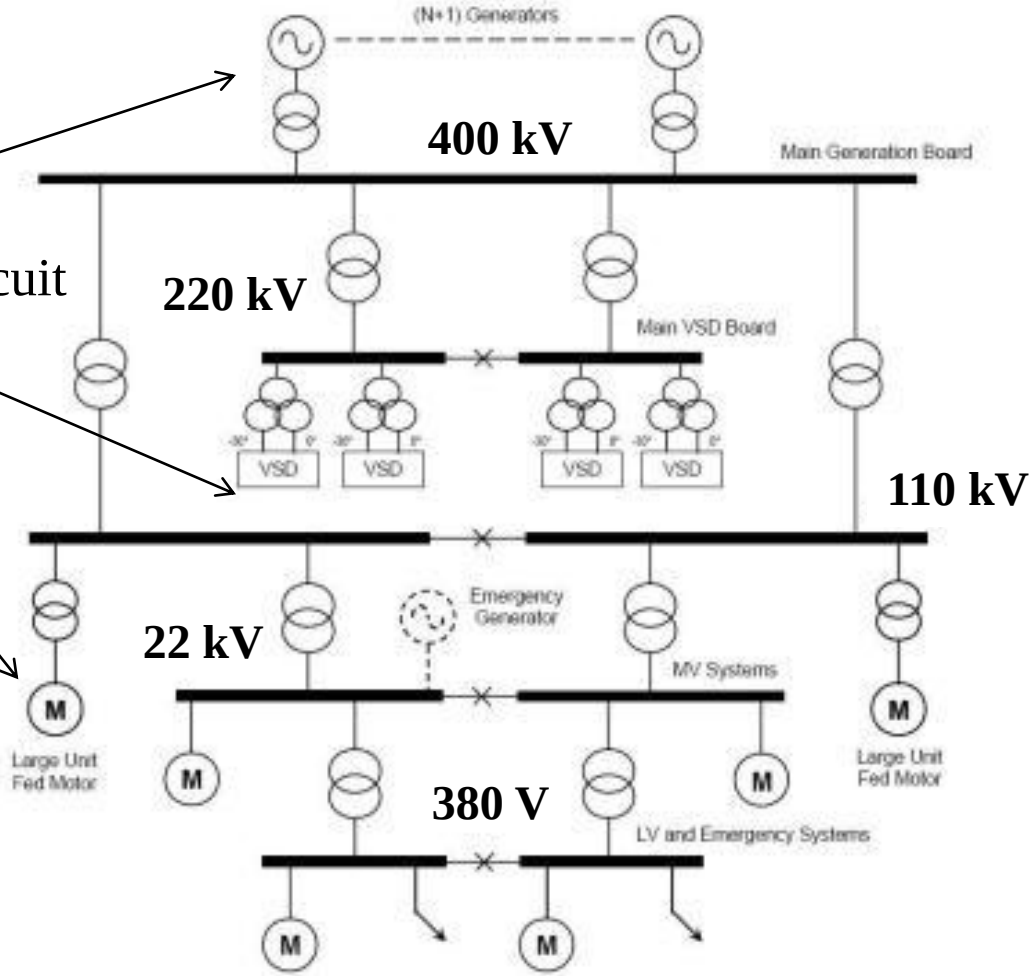

Where is the course of reduction PQ

δU

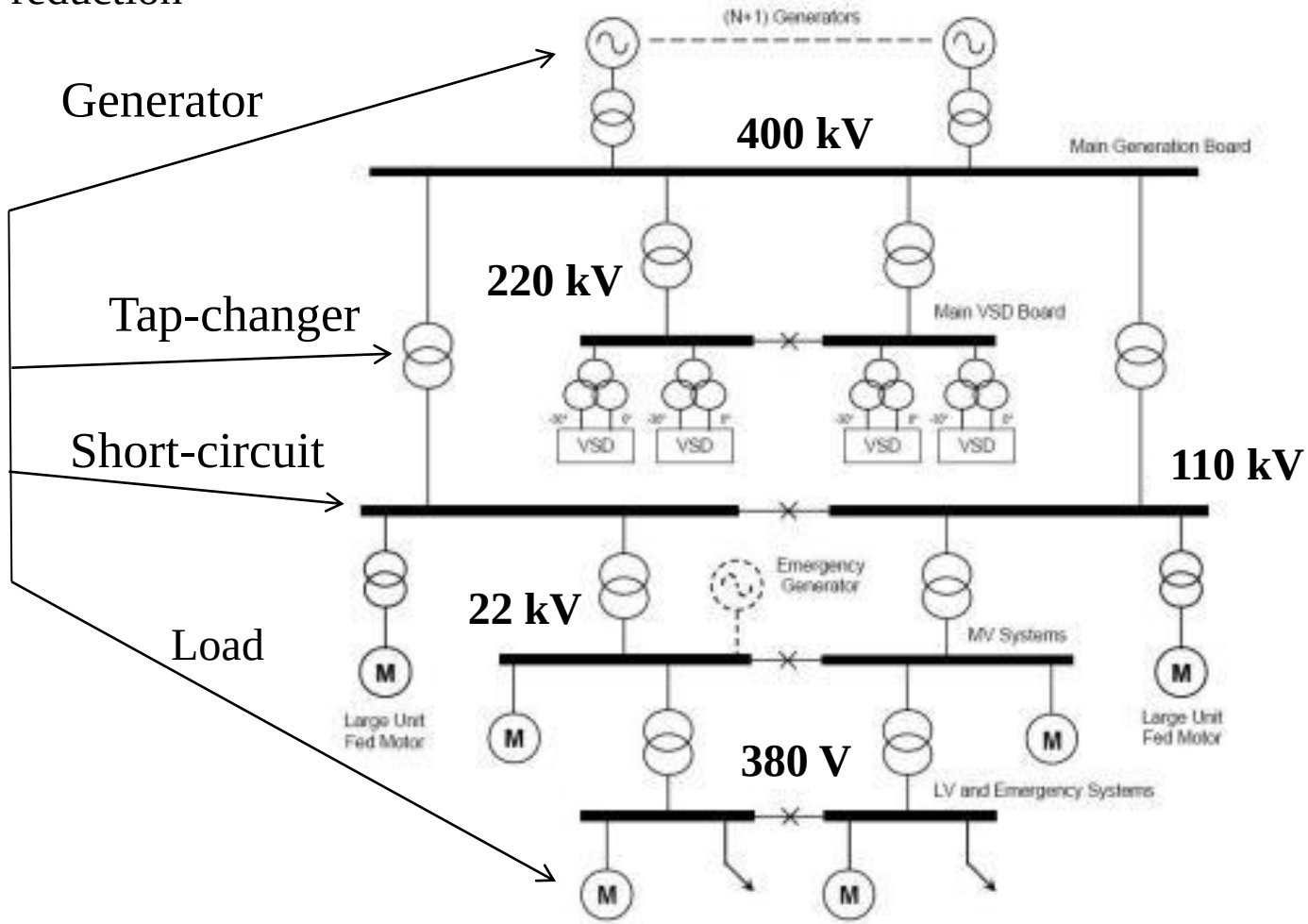

Where is the course of reduction PQ

K_{uo}

U_{pulse}

Lightning and switching transient process

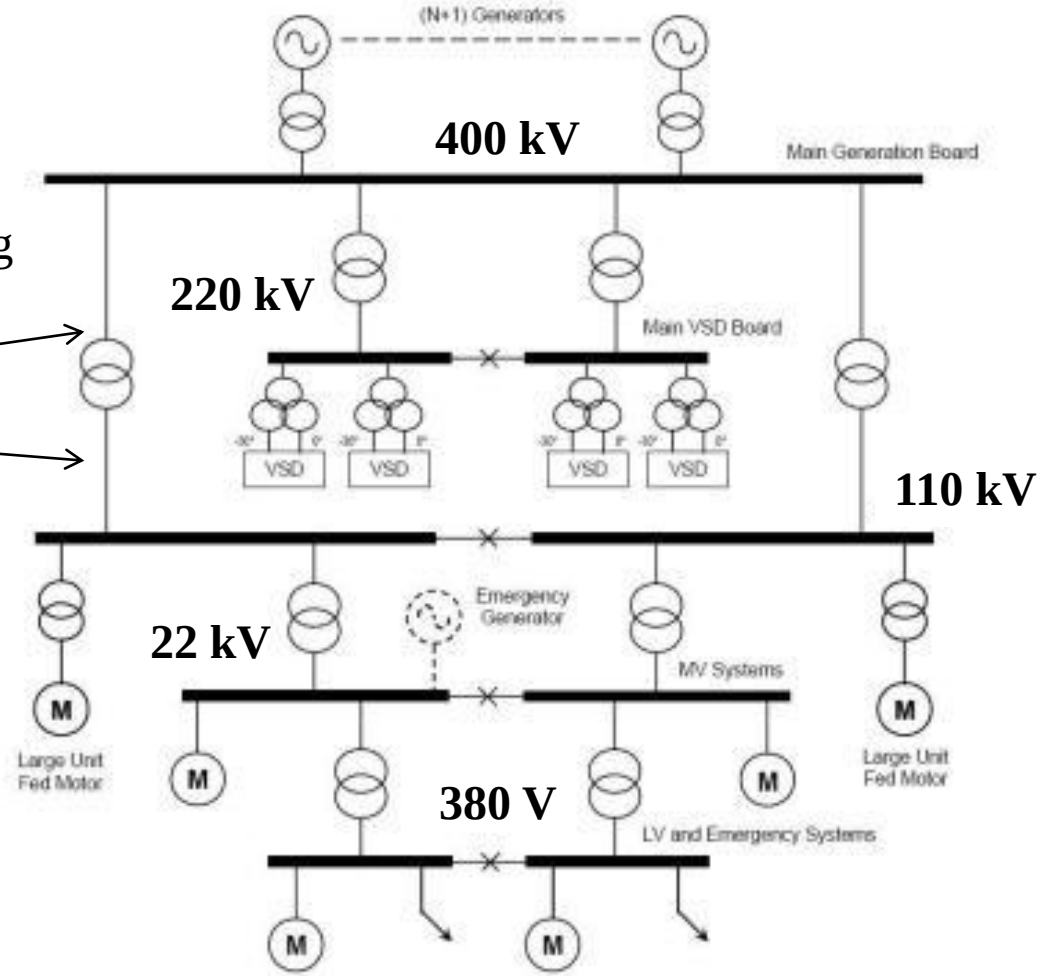

Where is the course of reduction PQ

δU_s

Generator

Switching transient process

Short-circuit

Load

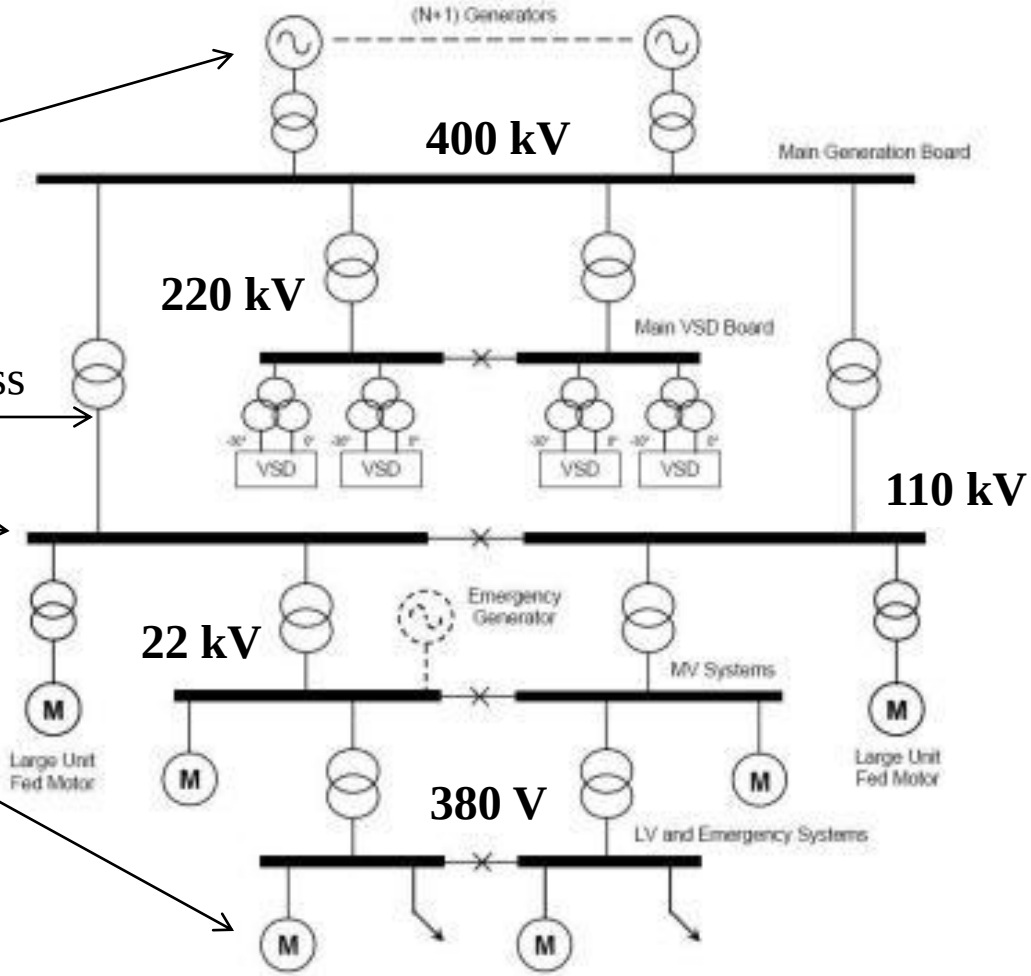

Where is the
course of reduction
PQ

K_U
$K_{U(n)}$

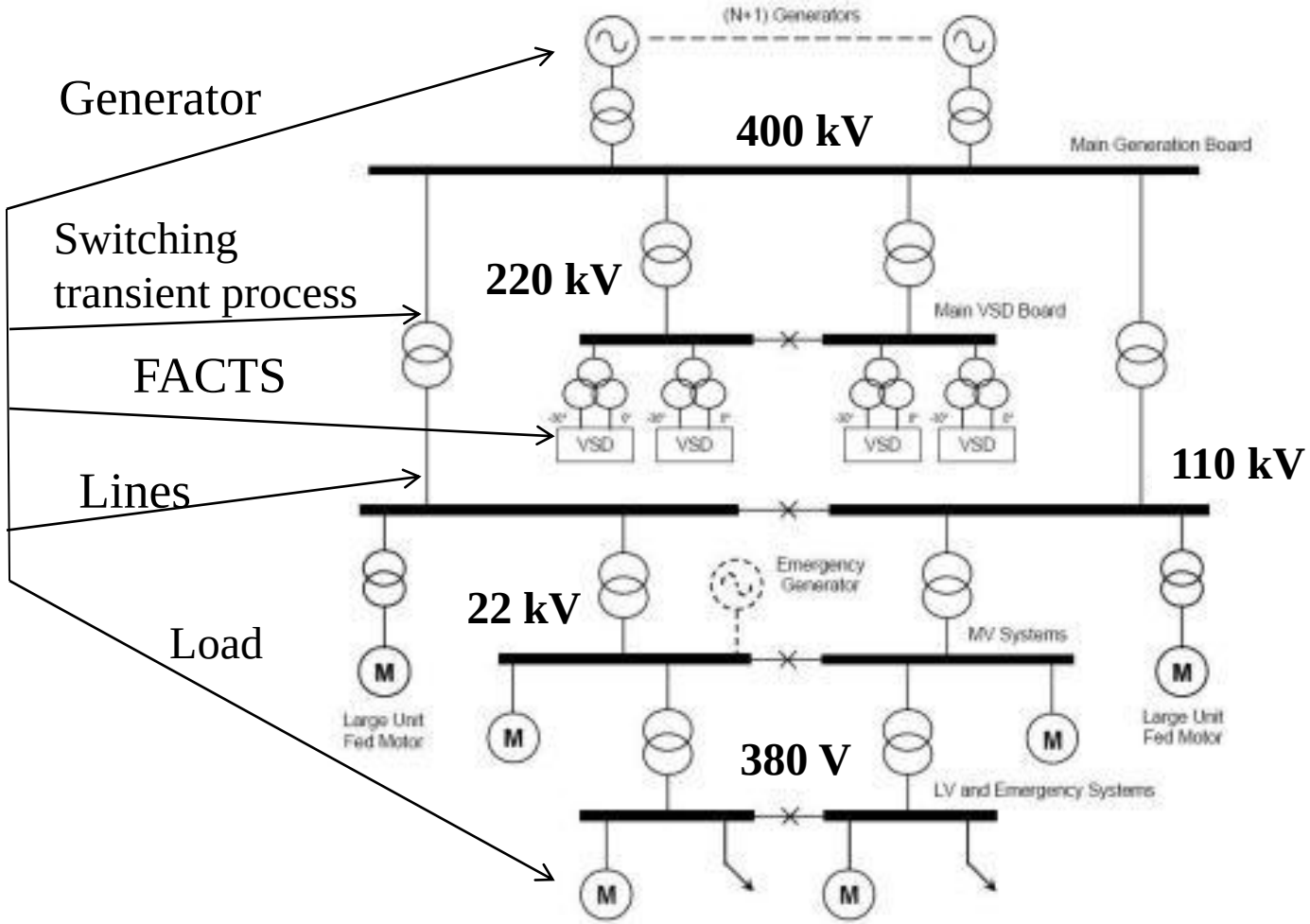

Where is the
course of reduction
PQ

K_{2U}
K_{0U}

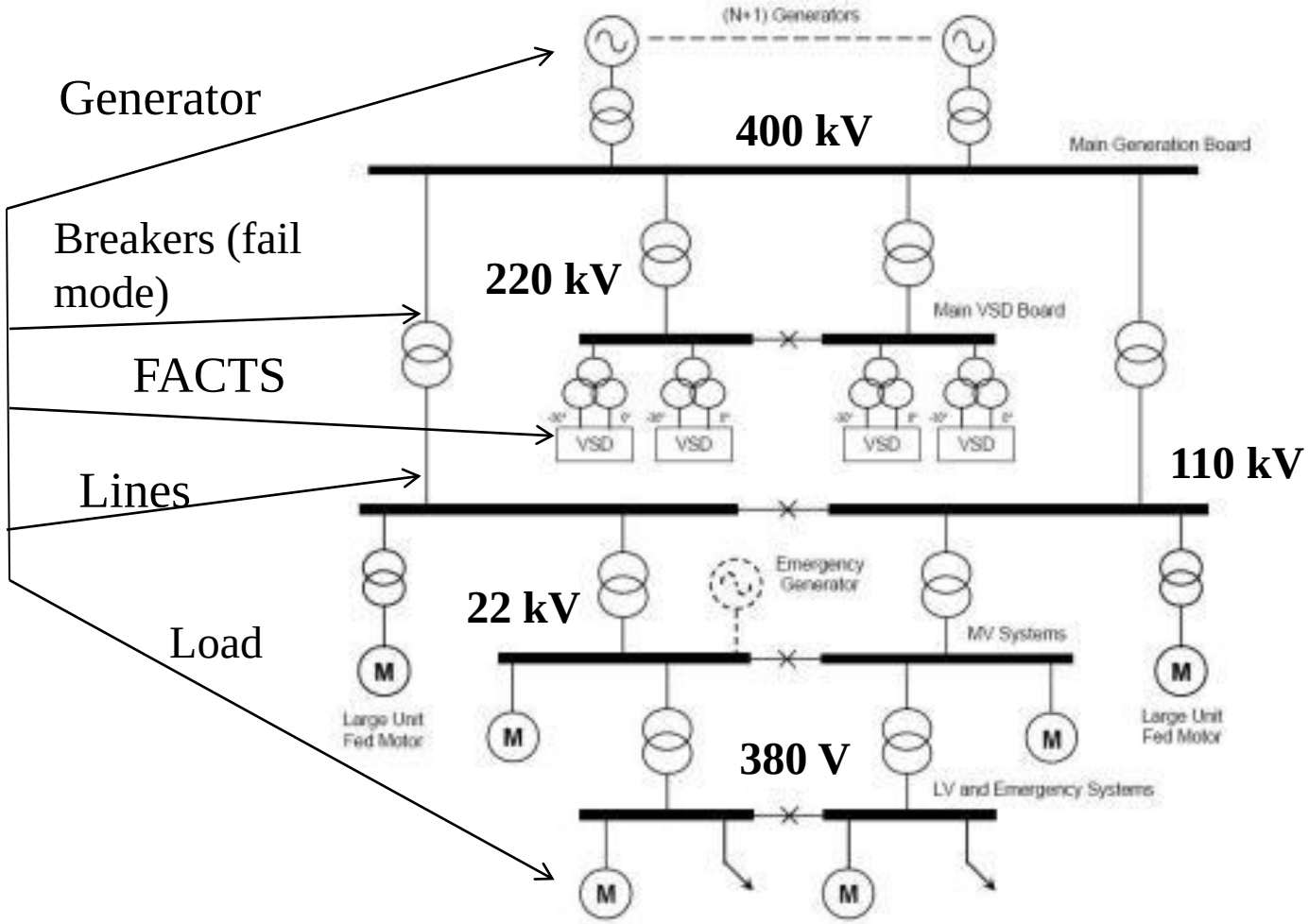

Where is the
course of reduction
PQ

P_{St}
P_{Lt}

Load

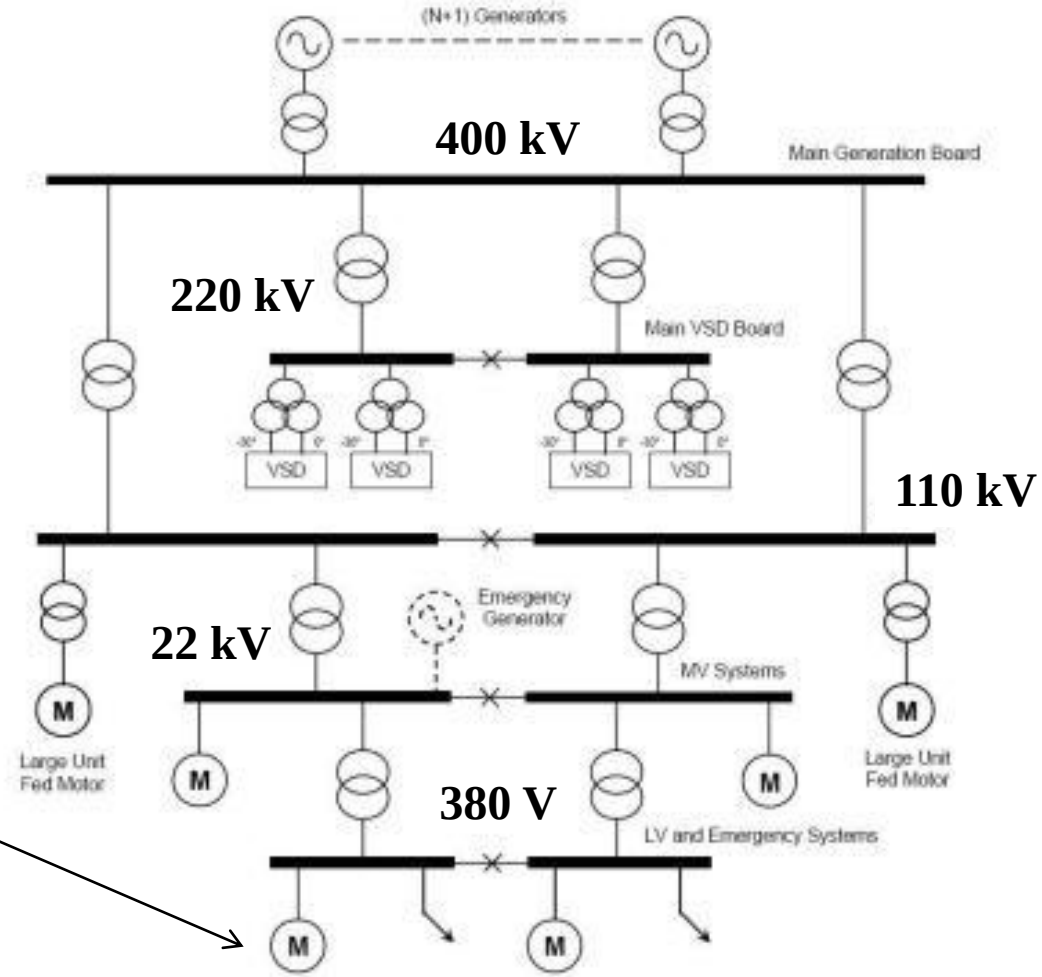

PQ measuring tools

Single phase PQ measuring tool.

«ЭРИС - КЭ.05» (Микро)
Made by:
ООО «Энергоконтроль»

«Парма РК1.01»
Made by:
ООО «ПАРМА»

PQ measuring tools

3-phase PQ measuring tool.

«ППКЭ-1-50»
Made by:
ООО «НПФ Солис-С»

«Парма РК3.01»
Made by:
ООО «ПАРМА»

«ПРОРЫВ-КЭ»
Made by: НПП «Прорыв»

«Ресурс UF»
Made by:
ООО НПП «Энерготехника»

PQ measuring tools

3-phase PQ measuring tool for diagnostic

«Эрис-КЭ.02…05»
Made by: ООО «Энергоконтроль»

«ПАРМА РК 6.05М»
Made by: ООО «ПАРМА»

«Энергомонитор – 3.3»
Made by: НПП Марс-Энерго

«Ресурс-*UF*2»
Made by: ООО НПП «Энерготехника»

PQ measuring tools

Single phase W-counter with PQ analysis:

«ЭРИС - КЭ.06» (Счетчик)
Made by: ООО
«Энергоконтроль»

PQ measuring tools

Special PQ measuring tool.

ИВК «ОМСК-М»
Made by: ОмГУПС

«НЕВА-ИПЭ»
Made by: ООО «Энергоконтроль»