# Ground fault in three-phase systems

MV systems without the directly grounded neutral point (distribution systems) → single-phase fault of a different character than short-circuits (small capacitive current).

Fault current proportional to the system extent.

$I_p > 5\ A$ → arc formation → conductors, towers, insulators burning →
→ 2ph, 3ph short-circuits (mainly at cables)

Interrupted GF → overvoltage up to 4÷5 Uph

GF compensation → uninterrupted system operation (to the failure clearance, short supply break), arc self-extinguishing

Ground fault

- resistive (100x Ω), metal and arc (x Ω)
- momentary (up to 0,5 s), short-term (up to 5 min), interrupted (repeating), durable (x hours)

# Conditions in a system with insulated neutral point

Presumptions: considered only capacities, symmetrical source voltage, open-circuit system

Systems of a small extent, $I_p < 10\ A$.

## Before the fault

vvn/vn

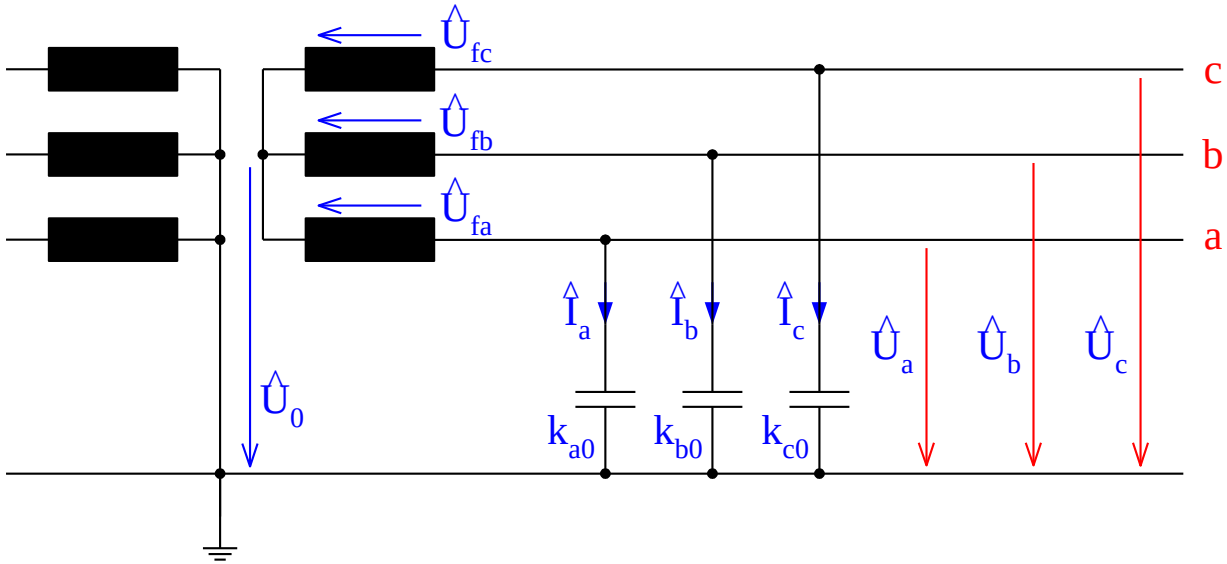

$$\hat{U}_a - \hat{U}_0 - \hat{U}_{fa} = 0 \qquad \hat{I}_a = j\omega k_{a0}\hat{U}_a$$

$$\hat{U}_b - \hat{U}_0 - \hat{U}_{fb} = 0 \qquad \hat{I}_b = j\omega k_{b0}\hat{U}_b$$

$$\hat{U}_c - \hat{U}_0 - \hat{U}_{fc} = 0 \qquad \hat{I}_c = j\omega k_{c0}\hat{U}_c$$

System with insulated neutral point

$$\hat{I}_a + \hat{I}_b + \hat{I}_c = 0$$

Symmetrical source

$$\hat{U}_{fb} = \hat{a}^2\hat{U}_{fa}, \quad \hat{U}_{fc} = \hat{a}\hat{U}_{fa}$$

Neutral point voltage

$$\hat{U}_0 = -\frac{k_{a0} + \hat{a}^2 k_{b0} + \hat{a} k_{c0}}{k_{a0} + k_{b0} + k_{c0}}\hat{U}_{fa}$$

Unbalanced capacities

$$\hat{U}_0 \neq 0$$

Symmetrical capacities

$$k_{a0} = k_{b0} = k_{c0} = k_0 \quad \Rightarrow \quad \hat{U}_0 = 0$$

## Perfect (metal) durable grounf fault

Symmetrical system

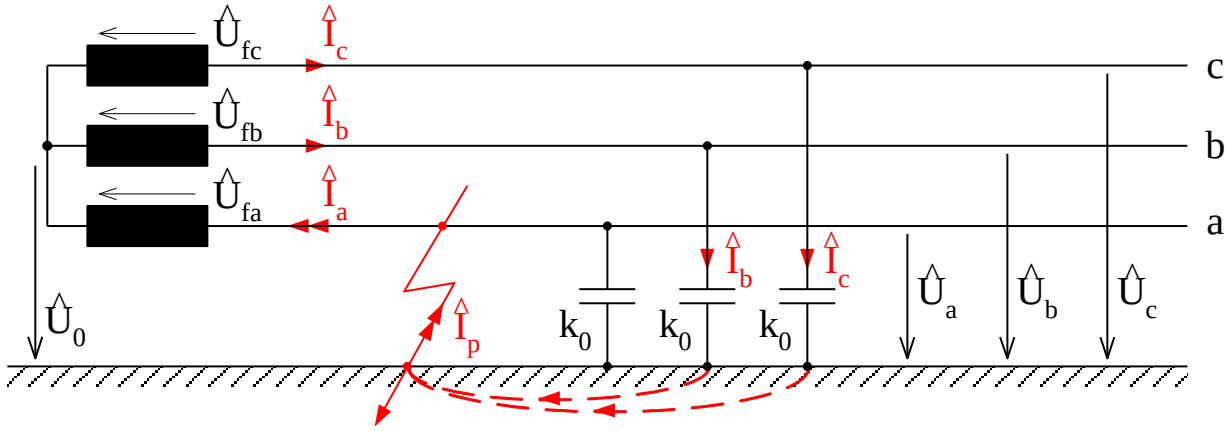


Fault current composed of 2 capacitive currents in the disaffected phases.

$$\hat{U}_a = 0$$

$$\hat{I}_p = \hat{I}_a = \hat{I}_b + \hat{I}_c$$

$$\hat{I}_b = j\omega k_0 \hat{U}_b \qquad \hat{I}_c = j\omega k_0 \hat{U}_c$$

$$\hat{U}_a - \hat{U}_0 - \hat{U}_{fa} = 0 \quad \Rightarrow \quad \hat{U}_0 = -\hat{U}_{fa} \quad !$$

$$\hat{U}_b - \hat{U}_0 - \hat{U}_{fb} = 0 \quad \Rightarrow \hat{U}_b = \hat{U}_0 + \hat{U}_{fb} = \left(-1 + \hat{a}^2\right)\hat{U}_{fa} = -\sqrt{3}e^{j30^\circ}\hat{U}_{fa} \quad !$$

$$\hat{U}_c - \hat{U}_0 - \hat{U}_{fc} = 0 \quad \Rightarrow \hat{U}_c = \hat{U}_0 + \hat{U}_{fc} = \left(-1 + \hat{a}\right)\hat{U}_{fa} = -\sqrt{3}e^{-j30^\circ}\hat{U}_{fa} \quad !$$

→ affected phase voltage - zero
neutral point voltage - phase
disaffected phases voltage - line-to-line

Fault ground current

$$\hat{I}_p = \hat{I}_b + \hat{I}_c = j\omega k_0\left(\hat{U}_b + \hat{U}_c\right)$$

$$= j\omega k_0\left[\left(-1 + \hat{a}^2\right) + \left(-1 + \hat{a}\right)\right]\hat{U}_{fa}$$

$$= j\omega k_0\left(-2 + \hat{a}^2 + \hat{a} + 1 - 1\right)\hat{U}_{fa}$$

$$\underline{\hat{I}_p = -3j\omega k_0 \hat{U}_{fa} = 3j\omega k_0 \hat{U}_0 \quad \left(A; s^{-1}, F, V\right)}$$

# Voltage and current conditions

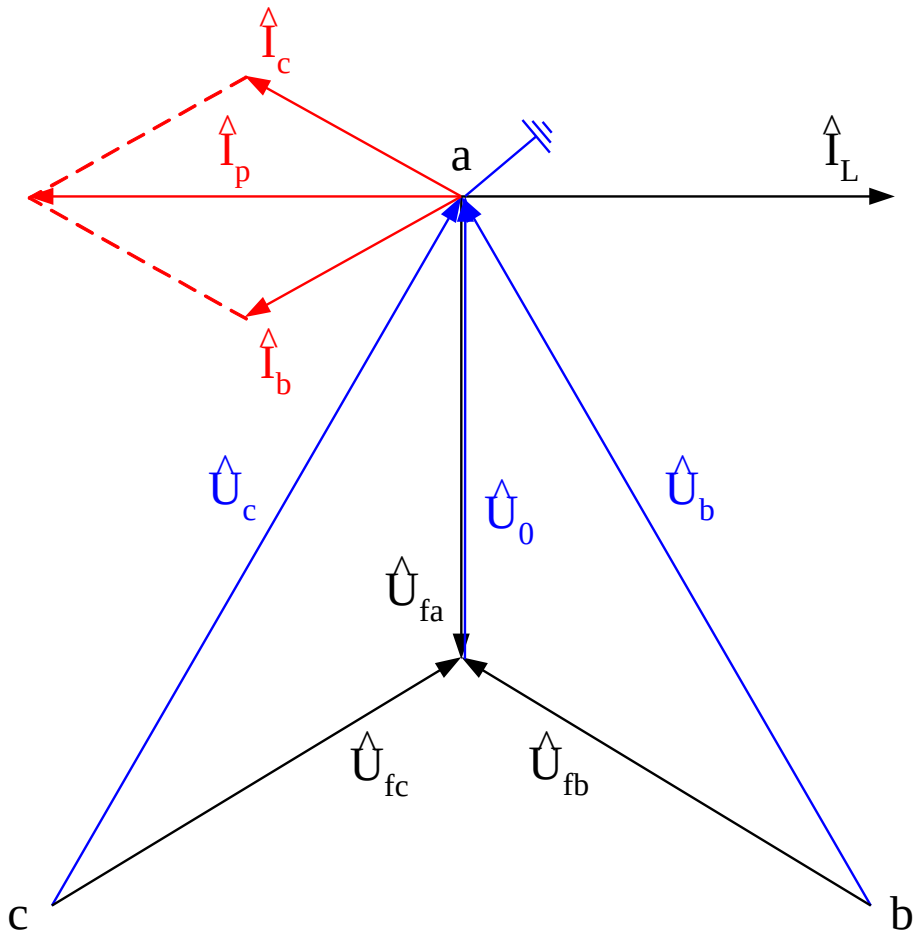

Fault current depends on the total system extent and almost doesn't depend on the failure point distance from the transformer.

$$I_p = 3\omega k_{01} l U_f \quad \left(A; s^{-1}, F/km, km, V\right)$$

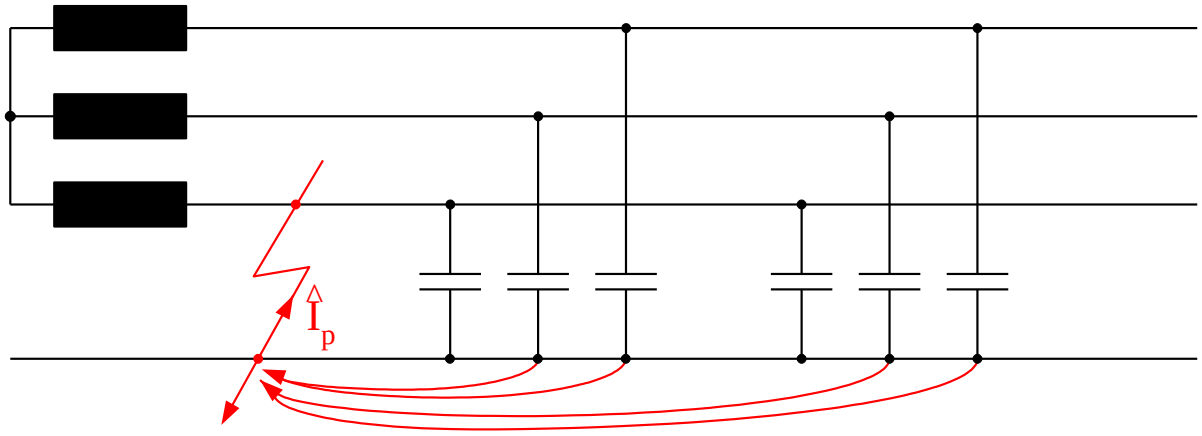


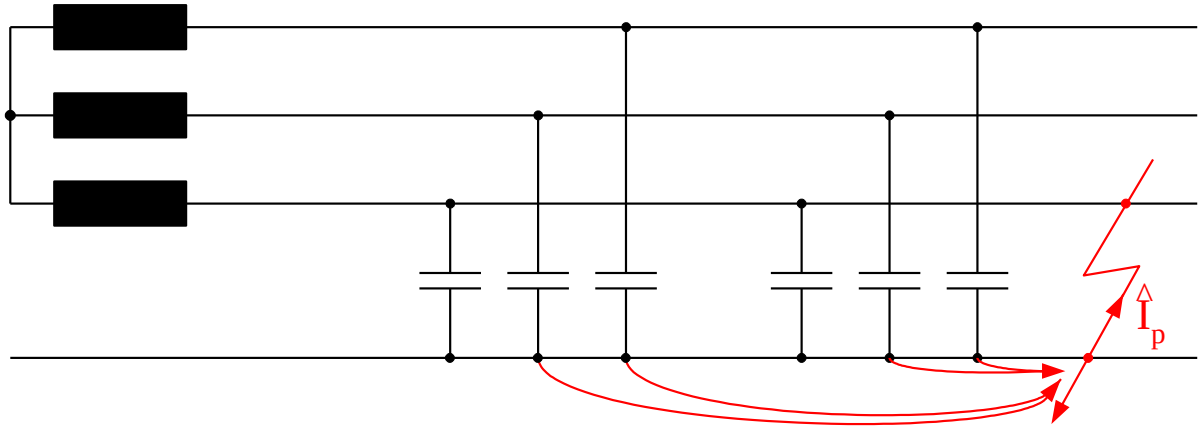

Note: overhead 22kV – current ca. 0,06 A/km
cabels 22kV – current ca. 4 A/km

Note: MV system can be operated also with GF, on LV level again 3-phase supplying due to transformers Y/D/yn

## Resistive ground fault

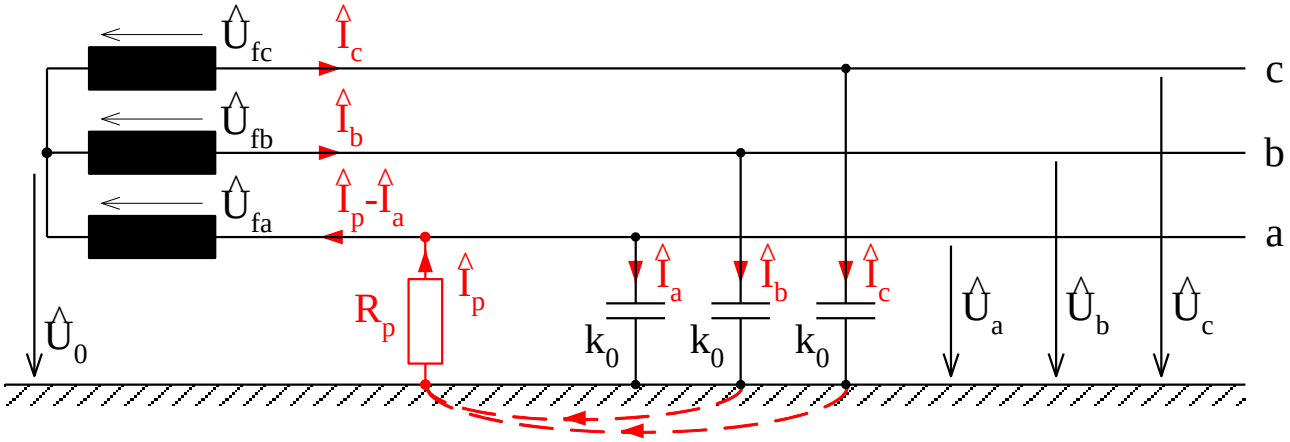


Affected phase voltage non-zero

$$\hat{I}_p = -\hat{U}_a / R_p = \hat{I}_a + \hat{I}_b + \hat{I}_c$$

## Neutral point voltage

$$\hat{U}_0 = -\frac{j\omega\left(k_{a0} + \hat{a}^2 k_{b0} + \hat{a} k_{c0}\right) + R_p^{-1}}{j\omega\left(k_{a0} + k_{b0} + k_{c0}\right) + R_p^{-1}} \hat{U}_{fa}$$

## Circle equation in the Gauss plane

$$\hat{U}_0 = -\frac{\hat{A} + R_p^{-1}}{\hat{B} + R_p^{-1}} \hat{U}_{fa}$$

$R_p = 0$ $\qquad$ $\hat{U}_0 = -\hat{U}_{fa}$

$R_p = \infty$ $\qquad$ $\hat{U}_0 = 0$ (for symmetrical capacities)

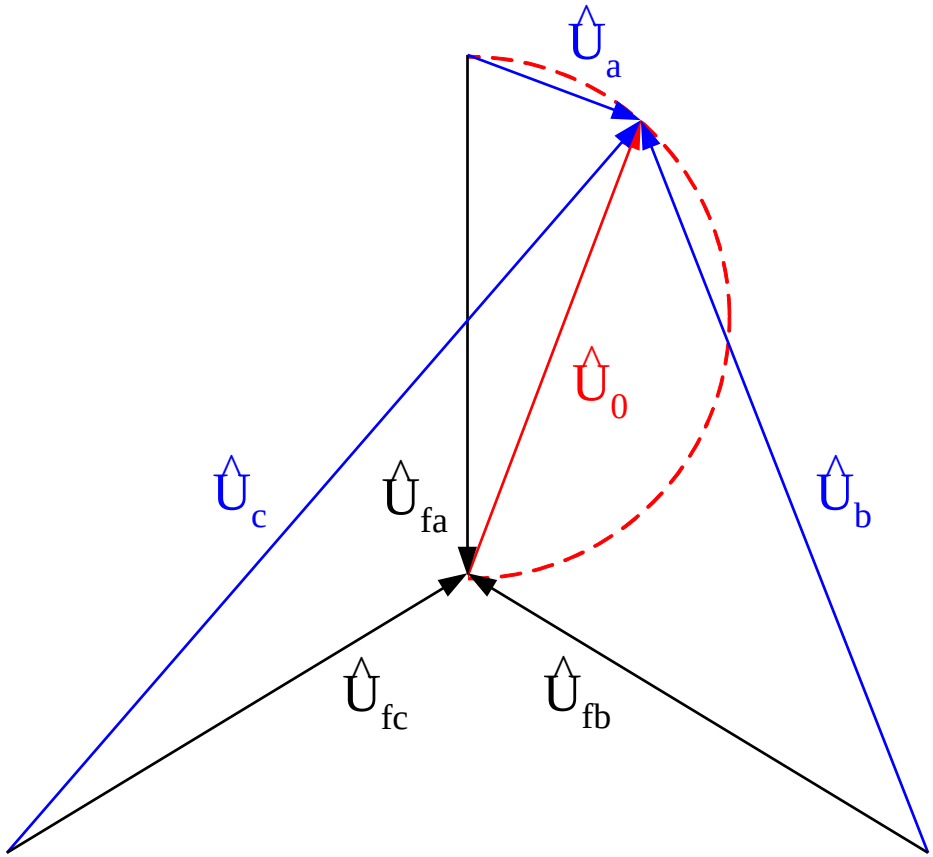


Disaffected voltage can be higher than line-to-line value.

# Ground current compensation

Compensation in system where $I_p > 5A$ - suitable

$I_p > 10A$ - necessary

Method: Continuously controlled arc-suppression coil between the transformer neutral point and the ground (at transformers with D winding by means of neutral coil with Y)

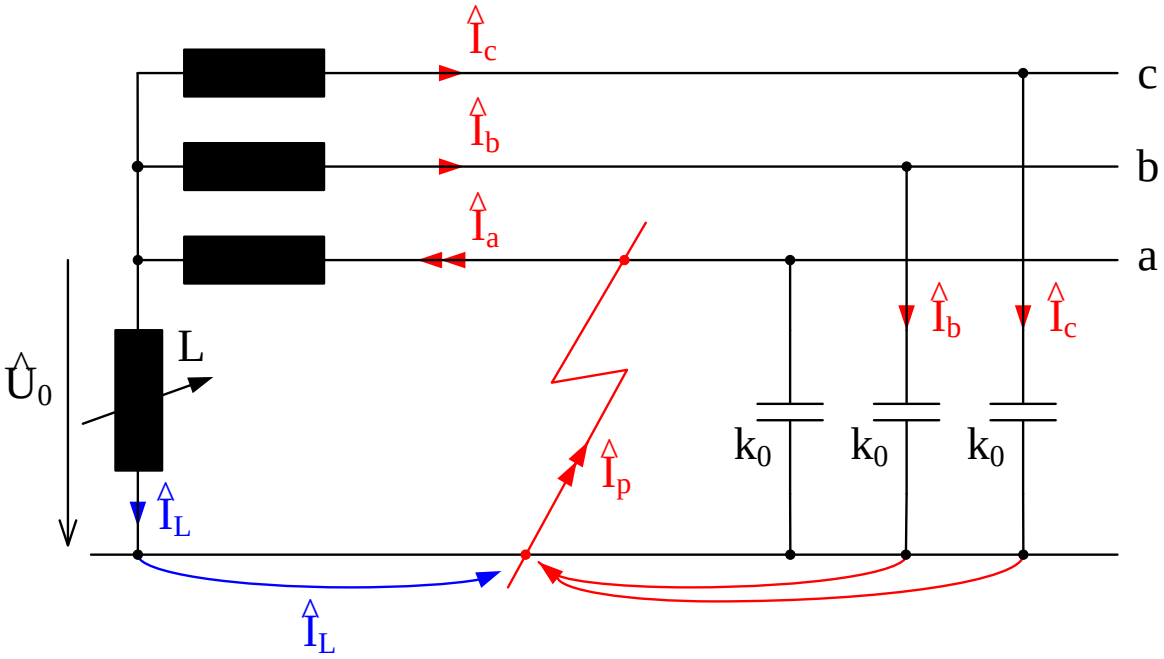

Faultless state

$$U_0 = 0$$ - symmetrical capacities

$$U_0 < 0{,}01\, U_f$$ - usual unbalance

Perfect ground fault

$$\hat{U}_0 = -\hat{U}_{fa}$$

Arc-suppression coil current

$$\hat{I}_L = -j\frac{\hat{U}_0}{\omega L}$$

Total compensation

$$\hat{I}_L = -\hat{I}_p$$

$$-j\frac{\hat{U}_0}{\omega L} = -3j\omega k_0 \hat{U}_0$$

Hence

$$L = \frac{1}{3\omega^2 k_0} \quad (H; s^{-1}, F)$$

Coil power (reactive inductive)

$$\hat{S} = \hat{U}_0 \hat{I}_L^* = 3j\omega k_0 \hat{U}_0 \hat{U}_0^* = j\omega k_0 U^2 = Q_L$$

Ideal compensation: $I_p = 0$ in the fault point

Real situation: residual current (small active)

- inaccurate inductance setting
- uncompensatable active component (power line conductance, coil R)
- higher harmonics

$$\hat{I}_p = \left[ \frac{1}{R_L} + 3G_0 + j\left( 3\omega k_0 - \frac{1}{\omega L} \right) \right] \hat{U}_0$$

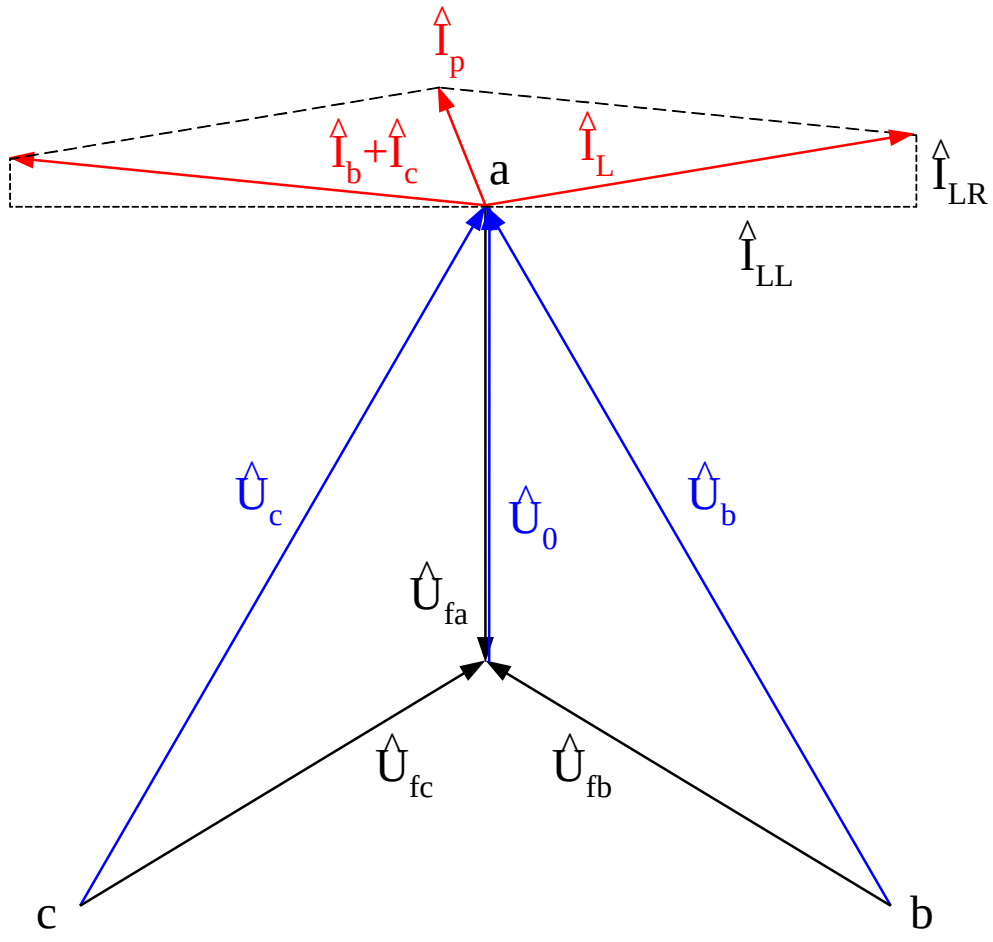
$\hat{I}_p$
$\hat{I}_b+\hat{I}_c$
a
$\hat{I}_L$
$\hat{I}_{LR}$
$\hat{I}_{LL}$
$\hat{U}_c$
$\hat{U}_0$
$\hat{U}_b$
$\hat{U}_{fa}$
$\hat{U}_{fc}$
$\hat{U}_{fb}$
c
b

# Arc-suppression coil tuning

L dimensioning by calculation, setting in the faultless state (for given system configuration).
Tuning is done by magnetic circuit change by means of motor (air gap).

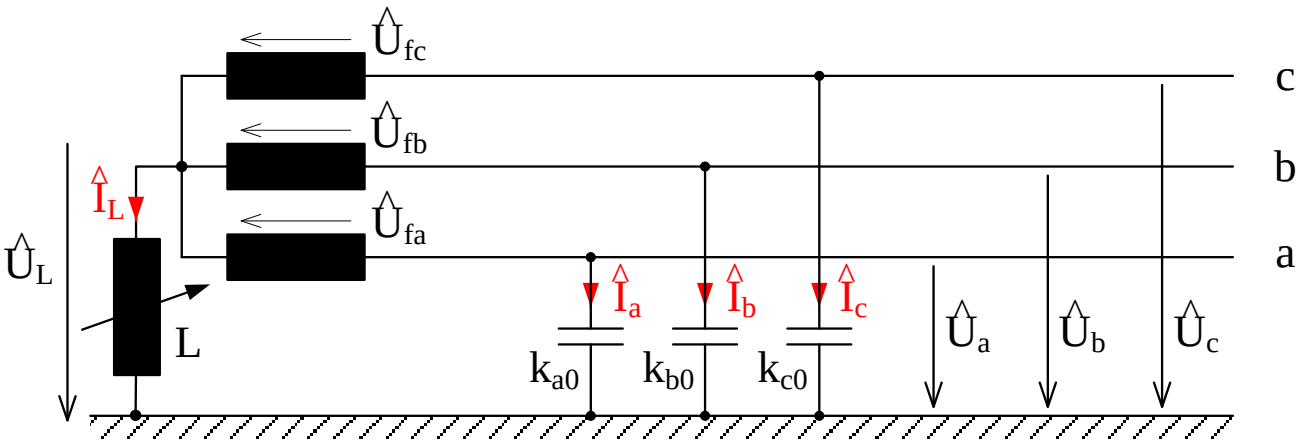


Coil voltage

$$\hat{U}_L = \frac{-\omega^2 L\left(k_{a0} + \hat{a}^2 k_{b0} + \hat{a} k_{c0}\right)}{\omega^2 L\left(k_{a0} + k_{b0} + k_{c0}\right) - 1}\hat{U}_{fa}$$

# Resonance dependence

$$\left|\frac{U_L}{U_{fa}}\right| = f(L)$$

$$L_{REZ} = \frac{1}{\omega^2\left(k_{a0} + k_{b0} + k_{c0}\right)}$$

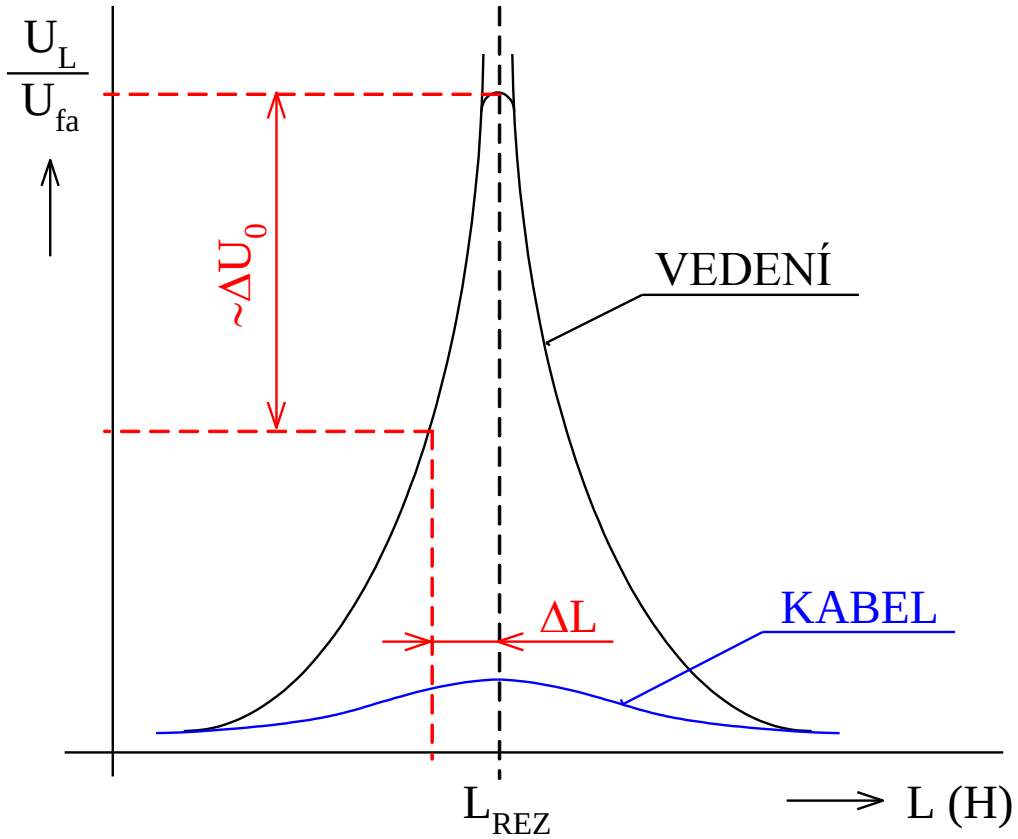

Overhead power lines

- higher capacitive unbalance
- maximum limited by resistances
- $L_{REZ}$ compensates GF totally → resonance coil
- setting by $U_L$ measuring
- with small R the transformer neutral point strained too much in resonance → intended (small) detuning → dissonance coil

Cable power lines

- small capacitive unbalance → flat curve → difficult tuning

# Cable systems grounded with the resistance

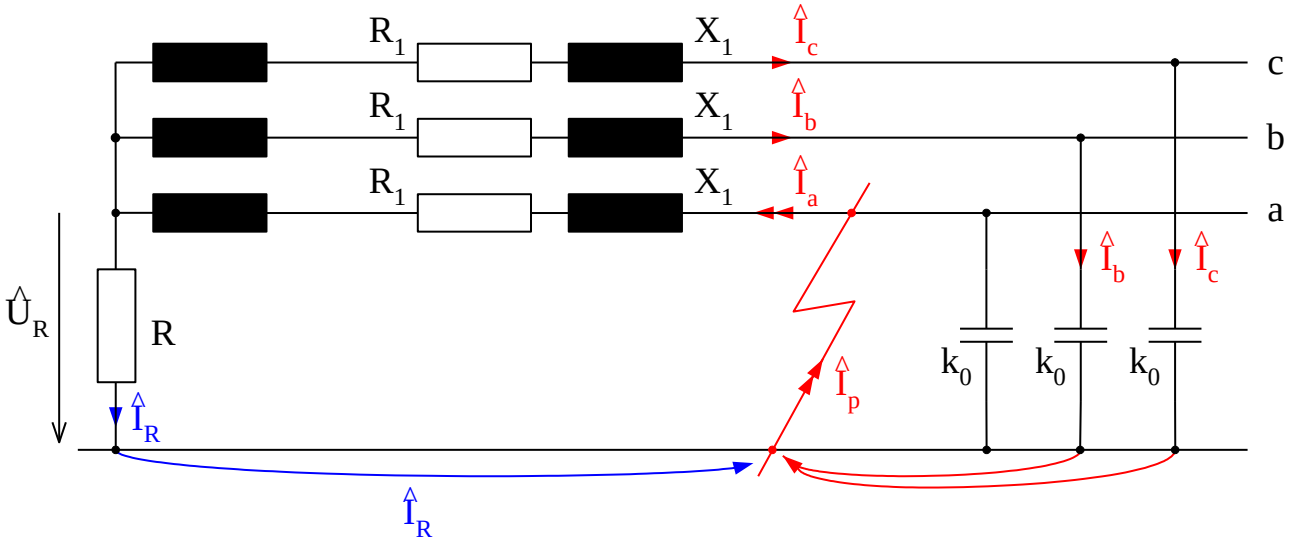


During the fault

- neutral point voltage almost phase value
- $I_p$ uncompensated
- $I_p$ depend on the system extent x decreases with the distance from transformer (short-circuit character)
- R value can influence $I_p$ size and character

$$\hat{I}_P = -(1/R + j3\omega k_0)U_f$$

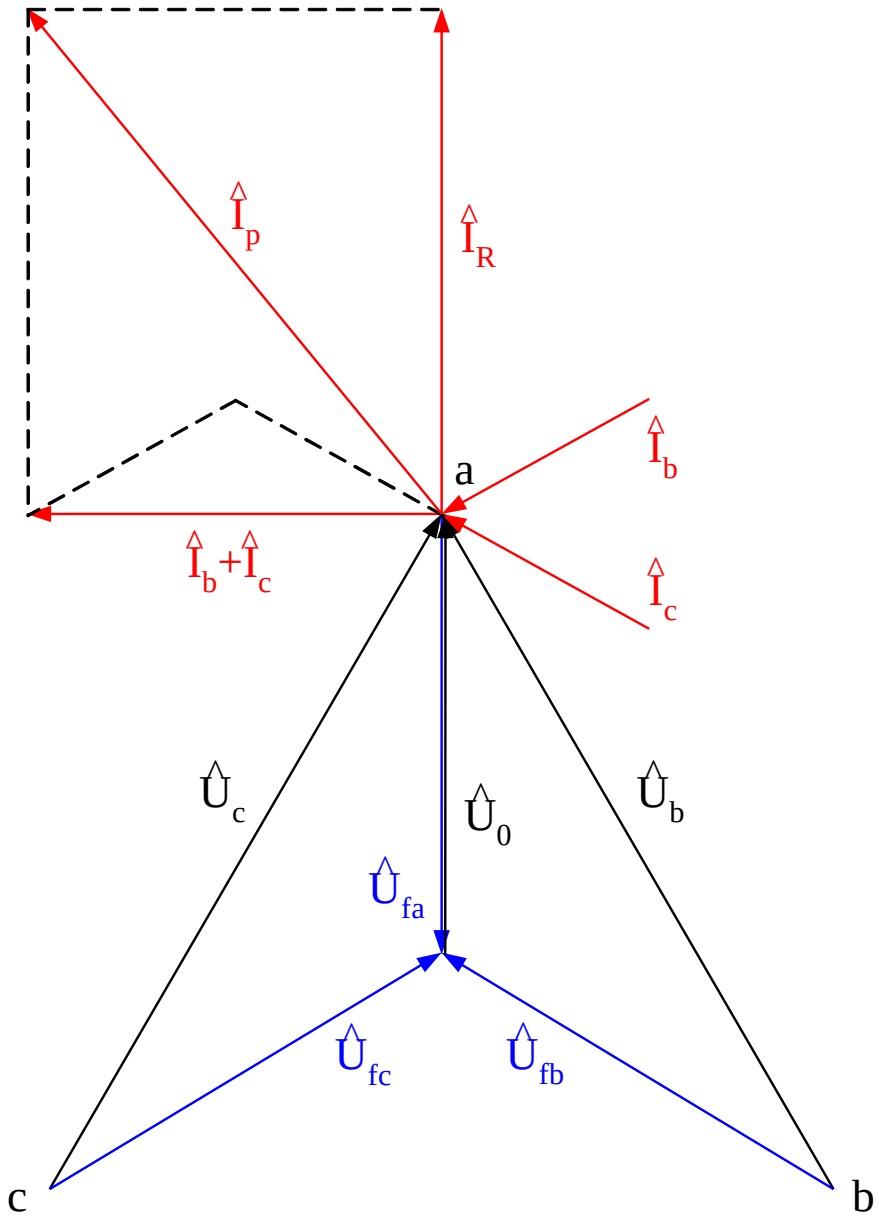
$\hat{I}_p$
$\hat{I}_R$
$\hat{I}_b$
a
$\hat{I}_b+\hat{I}_c$
$\hat{I}_c$
$\hat{U}_c$
$\hat{U}_0$
$\hat{U}_b$
$\hat{U}_{fa}$
$\hat{U}_{fc}$
$\hat{U}_{fb}$
c
b

# Permanent ground connection – components

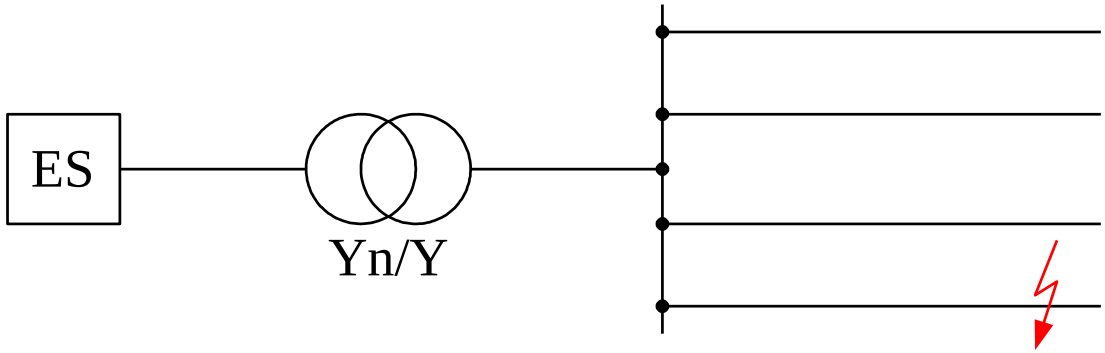


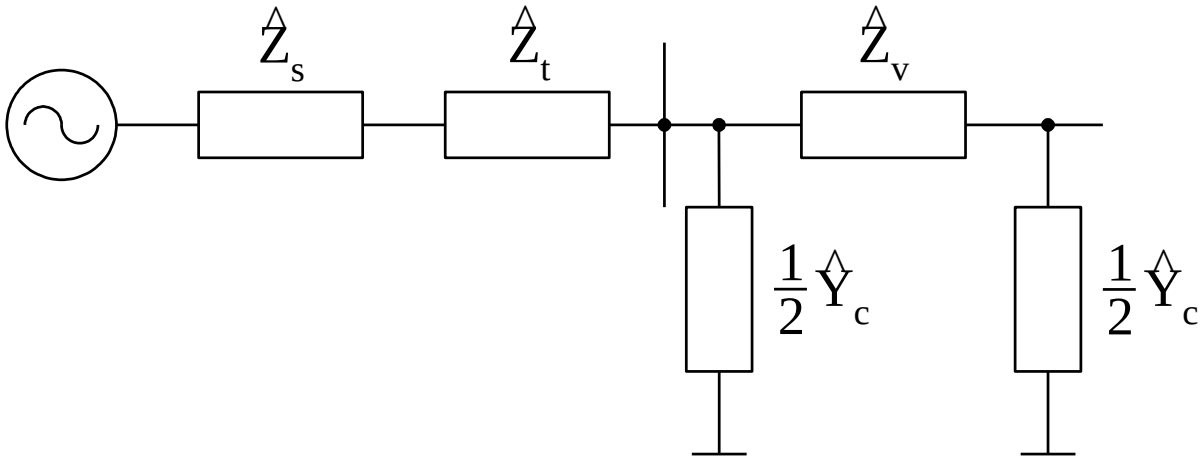


Char. equations: $U_a = 0, I_b = 0, I_c = 0$

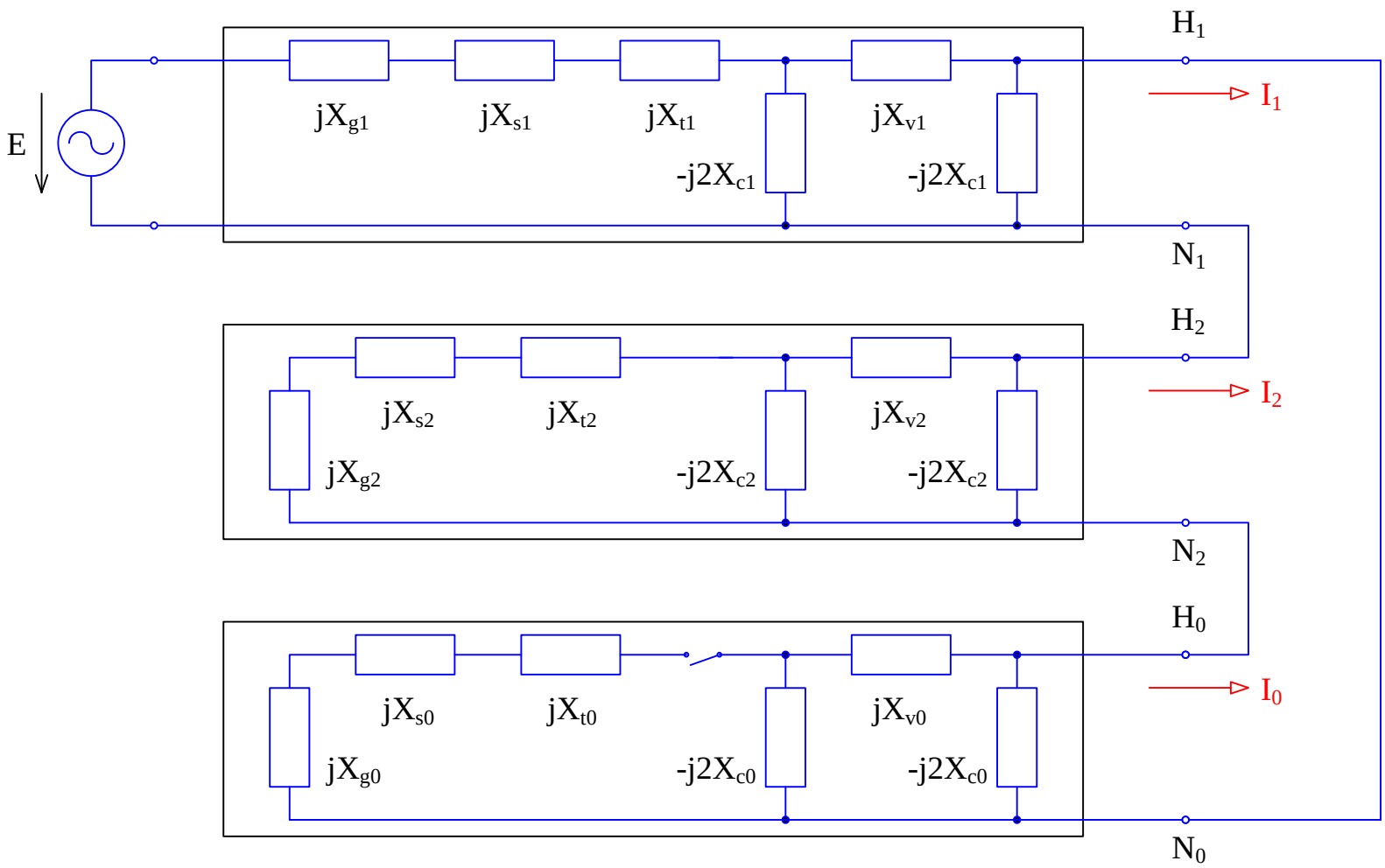


$$\hat{Y}_c^{-1} = \hat{Z}_c = -jX_c \quad >> \quad \left|\hat{Z}_v\right|, \left|\hat{Z}_t\right|, \left|\hat{Z}_s\right|$$

$$X_{c1} = 0$$

$$X_{c2} = 0$$

$$X_{c0} = X_C$$

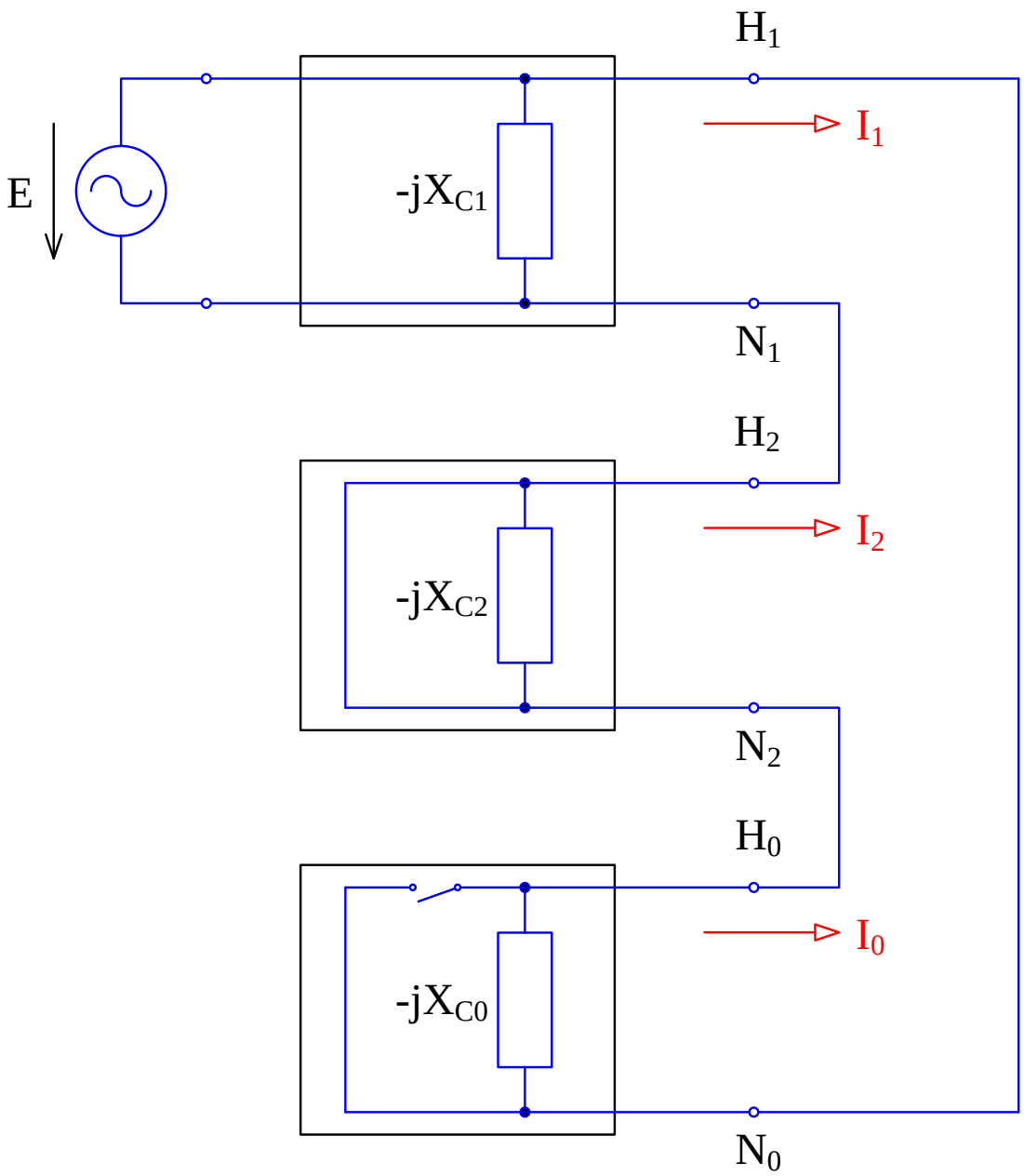

$$\left(I_{120}\right)=\left(T^{-1}\right)\left(I_{ABC}\right)=\frac{1}{3}\begin{pmatrix}1 & \hat{a} & \hat{a}^2\\ 1 & \hat{a}^2 & \hat{a}\\ 1 & 1 & 1\end{pmatrix}\begin{pmatrix}\hat{I}_A\\ 0\\ 0\end{pmatrix}=\frac{1}{3}\begin{pmatrix}\hat{I}_A\\ \hat{I}_A\\ \hat{I}_A\end{pmatrix}$$

$$\hat{I}_1=\hat{I}_2=\hat{I}_0=\frac{1}{3}\hat{I}_A=\frac{\hat{E}}{-jX_C}$$

$$\hat{U}_1=\hat{E} \qquad \hat{U}_2=0 \qquad \hat{U}_0=-\hat{E}$$

- phase currents

$$\hat{I}_A=3\hat{I}_1 \qquad \hat{I}_B=0 \qquad \hat{I}_C=0$$

$$\hat{I}_p=-\hat{I}_A=-3j\frac{\hat{E}}{X_C}$$

$$\underline{\hat{I}_p = -3j\omega k_0 \hat{E}}$$

- phase voltage

$$\hat{U}_A = 0$$

$$\hat{U}_B = \hat{a}^2 \hat{U}_1 + \hat{a}\hat{U}_2 + \hat{U}_0 = \hat{a}^2 \hat{E} - \hat{E} = \left(\hat{a}^2 - 1\right)\hat{E}$$

$$\hat{U}_C = \hat{a}\hat{U}_1 + \hat{a}^2 \hat{U}_2 + \hat{U}_0 = \hat{a}\hat{E} - \hat{E} = \left(\hat{a} - 1\right)\hat{E}$$

- neutral point voltage

$$\hat{U}_N = \frac{1}{3}\left(\hat{U}_A + \hat{U}_B + \hat{U}_C\right) = \frac{1}{3}\left(\hat{a}^2 - 1 + \hat{a} - 1\right)\hat{E}$$

$$\underline{\hat{U}_N = -\hat{E}}$$

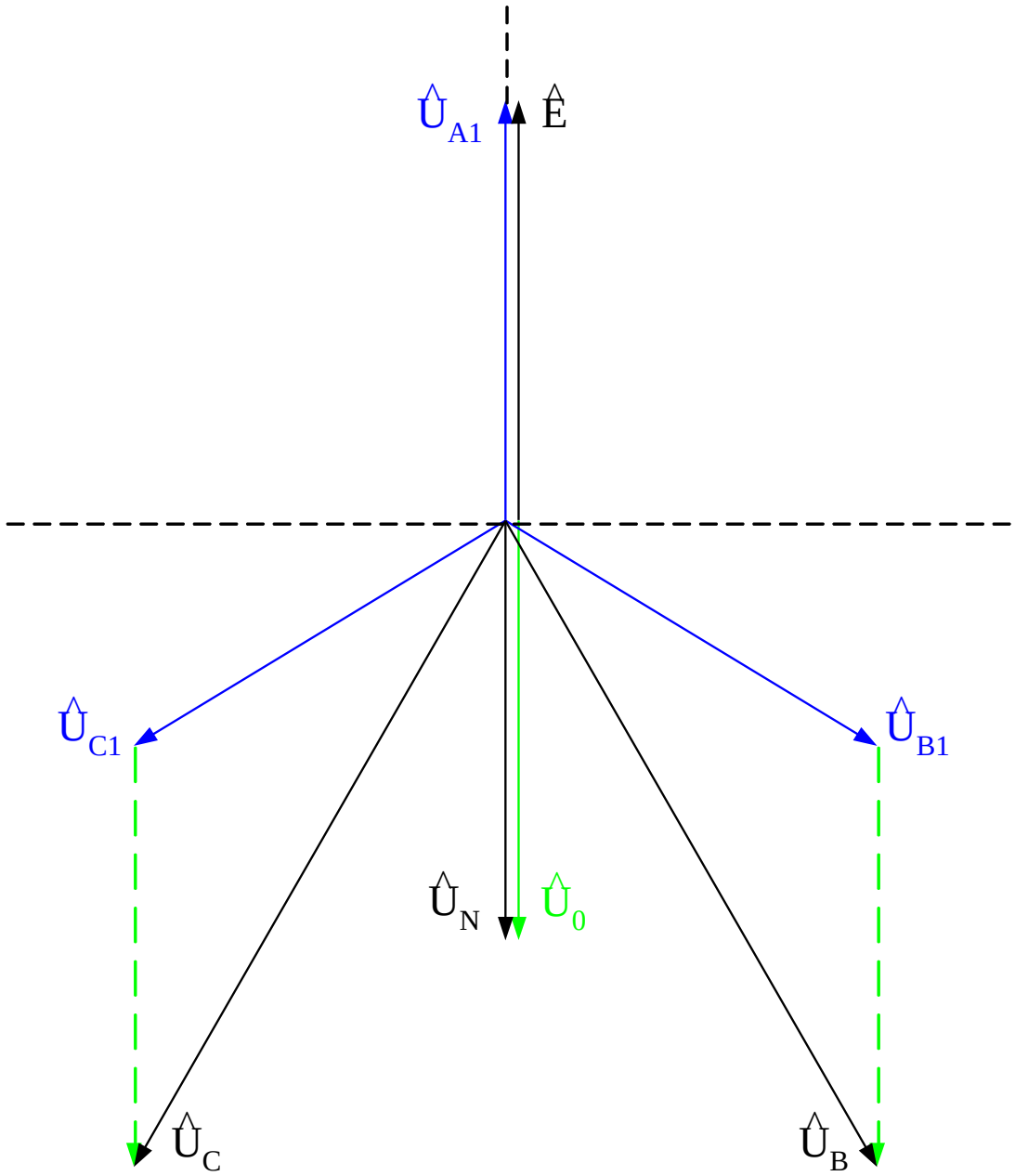
$\hat{U}_{A1}$
$\hat{E}$
$\hat{U}_{C1}$
$\hat{U}_{B1}$
$\hat{U}_N$
$\hat{U}_0$
$\hat{U}_C$
$\hat{U}_B$

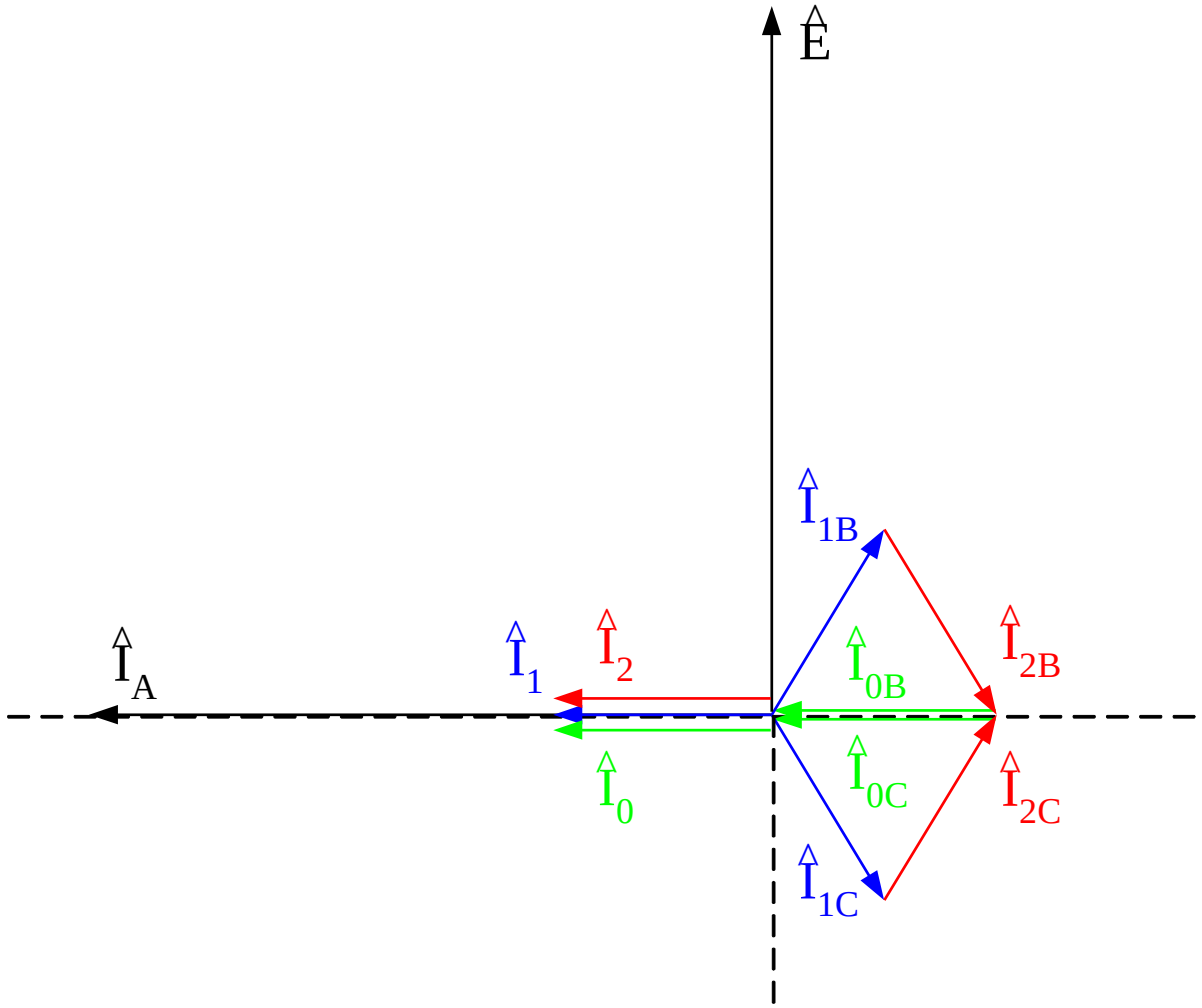
$\hat{E}$
$\hat{I}_{1B}$
$\hat{I}_{2B}$
$\hat{I}_{0B}$
$\hat{I}_A$
$\hat{I}_1$
$\hat{I}_2$
$\hat{I}_0$
$\hat{I}_{0C}$
$\hat{I}_{2C}$
$\hat{I}_{1C}$

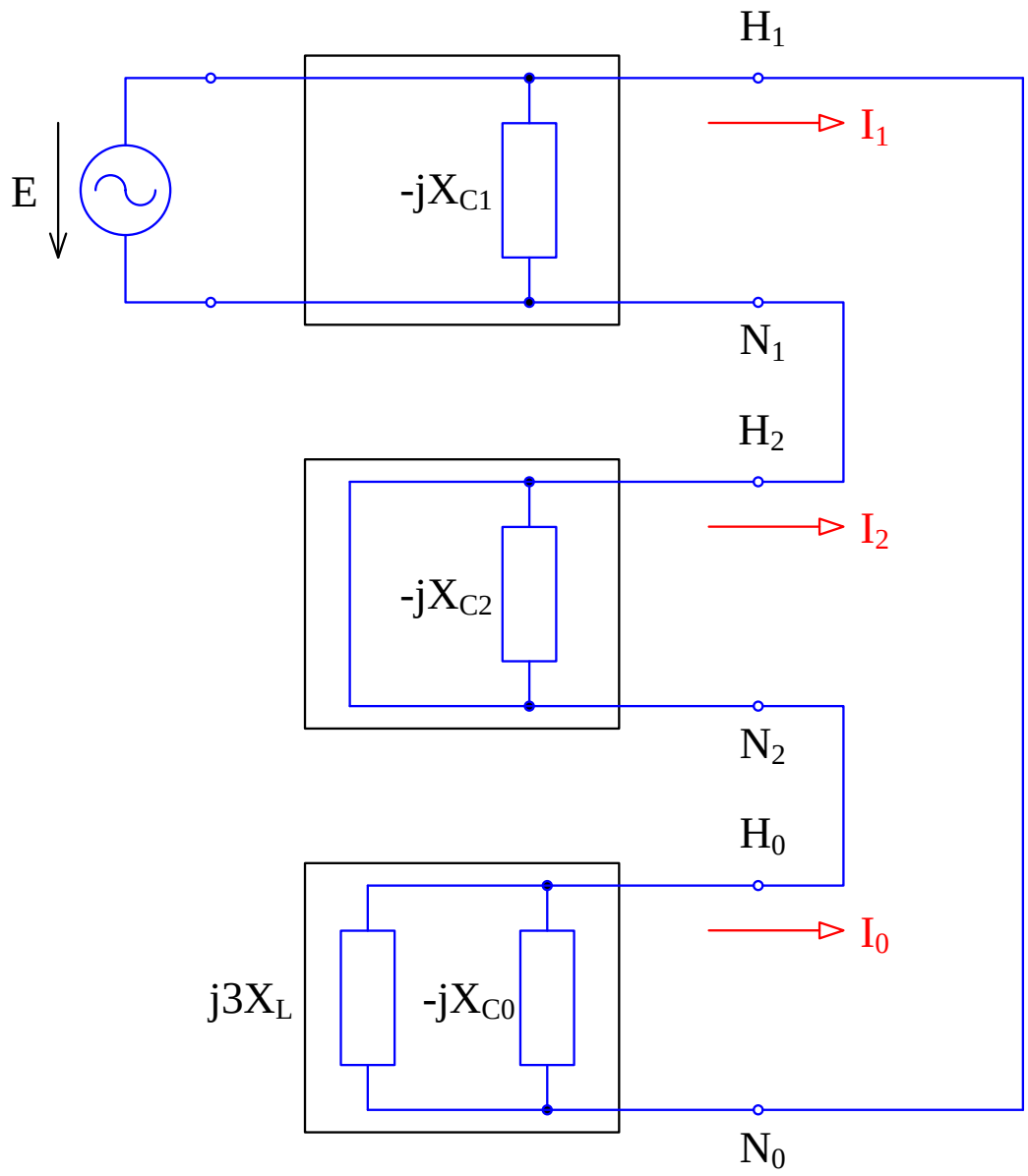
H1
I1
E
-jXC1
N1
H2
I2
-jXC2
N2
H0
I0
j3XL
-jXC0
N0

$$X_0 = \left(j3X_L\right)//\left(-jX_C\right) = j\frac{3X_L X_C}{X_C - 3X_L}$$

$$\hat{I}_1 = \frac{\hat{E}}{j\frac{3X_L X_C}{X_C - 3X_L}} = -j\frac{X_C - 3X_L}{3X_L X_C}\hat{E}$$

$$\hat{I}_p = -\hat{I}_A = -3\hat{I}_1 = j\frac{X_C - 3X_L}{3X_L X_C}\hat{E}$$

$$\hat{I}_p \overset{!}{=} 0$$

$$X_{c0} - 3X_L = 0$$

$$\underline{X_L = \frac{1}{3}X_{c0} = \frac{1}{3\omega k_0}}$$